English

Original Instructions

Installation, Operation and Maintenance Instructions

TR Muncher

OMMP/056/01
Rev 4, August 2018

Index

SPARES AND SERVICE	4
TOOLS	5
ATEX WARNINGS	6
INTRODUCTION	7
EC DECLARATION	8
INSTALLATION	9
WEIGHTS	15
WIRING DIAGRAM	17
CUTTER STACKING TABLE	18
TORQUE DATA / CUTTER STACK DATA	18
MUNCHER CODING SHEET	19
STACKING ARRANGEMENTS	20
DISMANTLING DIAGRAMS	27
ASSEMBLY DIAGRAMS	38
CT201 DRAWING REFERENCE	49
CT201 EXPLODED VIEWS	50
CT203 & CT205 EXPLODED VIEWS	52
CT203 & CT205 DRAWING REFERENCE	53
CT201 SECTIONAL ARRANGEMENT	55
CT203 & CT205 SECTIONAL ARRANGEMENT	56
CT201 GENERAL ARRANGEMENT	58
CT203 & CT205 GENERAL ARRANGEMENT	59
LIFTING & GUARDING DIAGRAMS	60

Revisions

Rev.	Date dd/mm/yyyy	Reason for Issue	Prepared By	Checked By	Approved By
1	24/01/2017	Renumbered from WD127/18. Updated EC Declaration & added Authorised European Distributor list.	M. Bailey	M. Bailey	M. Bailey
2	22/06/2017	Updated flange dimensions on page 60	M. Bailey	M. Bailey	A. Morris
3	20/09/2017	Section 1.9.1 - removed 'mineral oil' & replaced it with reference to lubrication schedule.	M. Bailey	M. Bailey	M. Bailey
4	31/08/2018	Removed Distributor list & added link to our website to access current Distributors	M. Bailey	M. Bailey	M. Bailey
5					
6					
7					
8					
9					
10					

Spares and Service Contacts

UK

Spares	+44 (0)161 214 2380 (direct line 8.15 am – 5.00 pm)
E-mail	ManchesterSpares@nov.com
Service	+44 (0)161 214 2390 (direct line 8.15 am – 5.00 pm)
E-mail	Customer.Services@nov.com
Service	+44 (0)161 339 9000 (24 hrs)

France

Spares & Service	+33 (0)3 29 94 26 88
E-mail	monofrance@nov.com

Australia

Melbourne	(03) 9773 7777
Sydney	(02) 8536 0900
Brisbane	(07) 3350 4582
Adelaide	(08) 8132 6800
Perth	(08) 9320 5800
Darwin	(08) 8931 3300
E-mail	ozsales@nov.com

New Zealand

Spares & Service	+64 (0)9 829 0333
E-mail	info@mono-pumps.co.nz

USA

Houston Spares & Service	+1 281 854 0300
Ohio Spares & Service	+1 877 486 6966
E-mail	moyno@nov.com

China

Beijing	+86 (0) 10 5707 0900
Shanghai	+86 (0) 21 3990 4558
E-mail	monoshanghai@nov.com

Distributors

For local distribution, please refer to our website:
www.mono-pumps.com/en-uk/sales_network

Tools

For servicing and maintenance work on the Muncher the following tools are recommended.

SB Muncher;

Metric Hexagon Keys - Range 6mm-8mm (0.24”-0.31”)
Metric Spanners - Range 10mm-36mm (0.39”-1.42”)
Torque Wrench

Series A Muncher;

Metric Hexagon Keys - Range 6mm-8mm (0.24”-0.31”)
Metric Spanners - Range 10mm-36mm (0.39”-1.42”)
Torque Wrench

Series F Muncher;

Metric Hexagon Keys - Range 6mm-8mm (0.24”-0.31”)
Metric Spanners - Range 10mm-36mm (0.39”-1.42”)
Torque Wrench
Your Supplier’s Locknut Key - Item No.s MQ F06A 9750, CF F06A 9755 and MM F06A 9760

TR Muncher;

Metric Hexagon Keys - Range 6mm-14mm (0.24”-0.55”)
Metric Spanners - Range 10mm-36mm (0.39”-1.42”)
Torque Wrench

Series R Muncher;

Metric Hexagon Keys - Range 5mm-14mm (0.20”-0.55”)
Metric Spanners - Range 10mm-36mm (0.39”-1.42”)
Torque Wrench

All equipment should be in good working condition with no signs of excessive wear.

GRINDERS

Due to the nature and design of grinding and macerating equipment it is possible that certain objects may enter the cutters, from the process stream, with the potential to cause sparking or jamming of the cutter assembly.

Where a grinder unit is to be installed in a potentially explosive atmosphere ensure that this has been specified at the time of purchase and that the equipment has been supplied accordingly and displays an ATEX nameplate or is supplied with a certificate of conformity. If there is any doubt as to the suitability of the equipment please contact your Supplier before commencing with installation and commissioning.

Process liquids or fluids should be kept within specified temperature limits otherwise the surface of grinder or system components may become an ignition source due to temperature rises. Where the process liquid temperature is less that 90ºC (194ºF) the maximum surface temperature will not exceed 90ºC (194ºF) provided the grinder is installed, operated and maintained in accordance with this manual. Where the process fluid temperature exceeds 90ºC (194ºF) the maximum surface temperature will be equal to the maximum process fluid temperature.

Cavities that could allow the accumulation of explosive gases, such as under guards, should where possible, be designed out of the system. Where this is not possible they should be fully purged before any work is carried out on the grinder or system.

Electrical installation and maintenance work should only be carried out by suitably qualified and competent persons and must be in accordance with relevant electrical regulations.

All electrical equipment, including control and safety devices, should be suitably rated for the environment in to which they are installed.

Where there may be a risk of an accumulation of explosive gases or dust non-sparking tools should be used for installation and maintenance.

To minimise the risk of sparking or temperature rises due to mechanical or electrical overload the following control and safety devices should be fitted. A control system that will shut the grinder down if the motor current or temperature exceed specified limits or a jam of the cutter stack occurs. This may include a system that reverses the machine in order to clear any such jam. An isolator switch that will disconnect all electrical supply to the motor and ancillary electrical equipment and be capable of being locked in the off position. All control and safety devices should be fitted, operated and maintained in accordance with the manufacturer's instructions.

It is important that the grinder rotates in the correct direction to give an efficient grinding operation. This must be checked on installation and commissioning and after any maintenance has been carried out. Failure to observe this may lead to mechanical or electrical overload.

When fitting drives, couplings, and guards to a grinder unit it is essential that these are correctly fitted, aligned and adjusted in accordance with the O&M instructions. Failure to do so may result in sparking due to unintended mechanical contact or temperature rises due to mechanical or electrical overload.

Mechanical seals should be suitably rated for the environment. The seal and any associated equipment, such as a flushing system, must be installed, operated and maintained in accordance with the manufacturer's instructions.

Where a packed gland seal is fitted this must be correctly fitted and adjusted. This type of seal relies on the process liquid to cool the shaft and packing rings so a constant drip of liquid from the gland section is required. Where this is undesirable an alternative seal type should be fitted.

Failure to operate or maintain the grinder and ancillary equipment in line with the manufacturer's instructions may lead to premature and potentially dangerous failure of components. Regular inspection, and where necessary replacement, of bearings, seals, other wearing parts and lubrication is essential.

The grinder and its components have been designed to ensure safe operation within the guidelines covered by legislation. Accordingly your Supplier has declared the machine safe to use for the duty specified as defined by the Declaration of Incorporation or Conformity that is issued with this instruction manual. The use of replacement parts that are not manufactured by or approved by your Supplier may affect the safe operation of the grinder and it may therefore become a safety hazard to both operators and other equipment. In these circumstances the Declaration provided will become invalid. The guarantee referenced on the Terms and Conditions of Sale will also be invalidated.

Introduction

This information and all the information contained herein, are the exclusive property of your Supplier, and contain information of a proprietary nature. It is provided for the sole purpose of transmitting the information contained to the designated recipient.

This information is to be used only as specified in the instrument of transmittal. It is not to be reproduced, copied in whole, or in part, nor is information it contains to be disclosed in any manner without the written consent of your Supplier. Its use for any other reason than the specified shall be a violation of the agreement with the recipient concerning the legal rights of your Supplier.

Your Supplier reserves the right to make changes, which may obsolete certain parts of this manual.

The manual gives a guide to the operation and maintenance of the TR Muncher given that all Health and Safety and good engineering practices are observed.

EC Declaration as defined by Machinery Directive 2006/42/EC.

The following harmonised standards are applicable: BS EN ISO 12100: 2010

EC Declaration of Incorporation

This declaration is only valid when partly completed machinery has been supplied.

In this case, the machinery meets the requirements of the said directive and is intended for incorporation into other machinery or for assembly with other machinery in order to constitute relevant machinery as defined by the said directive including any amendments, which are valid at the time of supply.

IMPORTANT

This machinery must not be put into service until the relevant machinery into which it is to be incorporated has been declared in conformity to the said directive.

This declaration is only valid when the machinery has been installed, operated and maintained in accordance with these instructions and safety guidelines contained within as well as instructions supplied for equipment assembled with or intended for use with this equipment.

EC Declaration of Conformity

This declaration is not valid for partly completed machinery that has been supplied.

In this case the machinery meets the requirements of the said directive including any amendments which are valid at the time of supply.

We further declare that, where applicable, said machinery also meets the requirements of:

The EMC Directive 2014/30/EU
The Low Voltage Directive 2014/35/EU
The Pressure Equipment Directive 2014/68/EU

IMPORTANT

This declaration is only valid when the machinery has been installed, operated and maintained in accordance with these instructions and safety guidelines contained within as well as instructions supplied for equipment assembled with or intended for use with this equipment.

Mr A. Morris - Engineering Manager - PDS for NOV PFT UK Ltd., Greengate Way, Middleton, Manchester, England, M24 1SA.

Installation, Operation and Maintenance

1.0 INSTALLATION

1.1 INSTALLATION & SAFETY RECOMMENDATIONS

In common with other items of process plant a Muncher must be installed correctly to ensure satisfactory and safe operation. The Muncher must also be maintained to a suitable standard. Following these recommendations will ensure that the safety of personnel and satisfactory operation of the Muncher is achieved.

1.1.1 OPERATING PRINCIPLE

The Muncher is a slow speed, high torque grinder designed to operate in the water, waste and biowaste industries. All Munchers have two shafts operating at differential speeds. Each shaft is fitted with identical interleaving cutters and spacers.

1.2 GENERAL

When handling harmful or objectionable materials, adequate ventilation must be provided in order to disperse dangerous concentrations of vapours. It is recommended that wherever possible, your Supplier's Munchers should be installed with provision for adequate lighting, thus ensuring that effective maintenance can be carried out in satisfactory conditions. With certain product materials, a hosing down facility with adequate draining will simplify maintenance and prolong the life of the Muncher components.

1.3 SYSTEM DESIGN AND INSTALLATION

At the system design stage, consideration must be given to the provision of filler plugs, and the installation of non-return and/or isolating valves where applicable.

Series 'F' AND 'H' Munchers are horizontal dry waste machines and must be fixed rigidly and horizontally either to the ground, or to a rigid system.

TR Pipeline models are designed for horizontal installation only.

Series 'A', SB and 'R' open channel models do not require fixing to the ground and can be supported either by the concrete channel or by steel supports bolted to the concrete channel walls.

Series 'A', SB and 'R' pipeline models can be installed at any altitude.

Pipework to and from the unit should be independently supported and not rely on the Muncher as a means of support. Wherever possible when installed in a vertical pipe system the Muncher unit should be independently supported.

1.4 HANDLING

During installation and maintenance, attention must be paid to the safe handling of all items. Where a Muncher or its components weigh in excess of 20kg (45lb) it is recommended that suitable lifting tackle should be used to ensure that personal injury or damage to components does not occur.

Lifting illustrations are contained in this document on page 13.

A weight table is included on pages 17 and 18.

NOTE

DO NOT ATTEMPT TO LIFT MUNCHER USING ONLY ONE LIFTING LUG. EXTREME CAUTION SHOULD BE OBSERVED FOR PERSONNEL SAFETY WHEN LIFTING HEAVY OBJECTS.

BY DESIGN THE CUTTERS HAVE SHARP EDGES.

GREAT CARE MUST BE TAKEN WHEN HANDLING. THE USE OF PROTECTIVE GLOVES IS RECOMMENDED.

1.5 STORAGE

Munchers are dispatched from our factory with the cutter chamber sprayed with a moisture repellent coating and ready for immediate installation and operation.

Should the machine be stored or left stationary for any length of time it is recommended that the cutter bank is re-sprayed with anti-rust lubricant and that the shafts are rotated monthly.

Removing the motor cowl and turning the fan by hand is the easiest way to rotate the shafts.

Failure to do this may result in a higher frequency of reversals and in extreme cases the machine to seize due to the tight running clearances of the individual cutting elements during commissioning and initial start-up.

The starter panel if supplied should be stored in a controlled dry environment to prevent moisture build-up causing corrosion of contactors and other metallic components.

See manufacturer instructions for motor/gearbox/drive and panel storage procedures.

NOTE:

The Muncher must be protected by a PLC control unit set up to the correct operating philosophy. Only PLC's supplied or approved by your Supplier should be used. Failure to observe this requirement may cause premature

machine failure and could invalidate the warranty of the machine. It is also important that the PLC be correctly wired into the panel.

Please refer to Wiring Diagram on page 16.

IMMEDIATELY PRIOR TO INSTALLATION AND STARTING

Before installing the Muncher please ensure that all plugs and inspection plates are replaced.

For TR Munchers please see section 1.9.1 prior to starting for instructions on how to fit constant level oilers.

1.6 ELECTRICAL

Electrical connection should only be made using equipment suitable for both rating and environment. Where any doubts exist regarding the suitability of equipment, your Supplier should be consulted before proceeding.

Earthing points will be provided on electric drives (if supplied) and it is essential that these are correctly connected. The electrical installation should include appropriate isolating equipment to ensure that the unit is safe to work on.

1.7 GENERAL SAFETY

Guards must be used

GREAT CARE MUST BE TAKEN TO PROTECT ALL ELECTRICAL EQUIPMENT FROM SPLASHING WHEN HOSING DOWN. WHERE YOUR SUPPLIER HAS SUPPLIED A BASIC MUNCHER THE ONUS IS ON THE USER TO FIT ADEQUATE GUARDS IN COMPLIANCE WITH THE REQUIREMENTS OF THE RELEVANT REGULATIONS.

All nuts and bolts, securing flanges and base mounting fixtures must be checked for tightness before operation. When commissioning the plant, all joints in the system must be checked thoroughly for leakage.

If, when starting, the Muncher does not appear to operate correctly, the plant must be shut down immediately and the cause of the malfunction established before operations are recommenced.

May contain substances from the ECHA SVHC Candidates List (REACH - Regulation (EC) No. 1907/2006)

NOTE:
NEVER inspect or work on or near the cutter chamber without first isolating and locking the machine.

GUARDS

In the interests of safety, and in accordance with relevant legislation, all guards must be replaced after necessary adjustments have been made.

Guards must be used

It is strongly recommended that a Series ‘F’ or ‘H’ ONLY horizontal dry Muncher system should incorporate: -

a) A steel (or similar) feed hopper with a minimum base to top height of 1.0 metre (3.3 feet) or a minimum height of 1.5 metres (4.9 feet) from floor level.

b) A steel (or similar) lower delivery chute, which is inaccessible without tools.

c) A protective grid mounted over the Muncher and conveyor system, especially where overhead walkways are present.

d) Emergency stop buttons positioned within easy reach of all operating staff.

The recommended extent of enclosure is illustrated in this document on page 52 onwards (Series F or H ONLY).

1.7.1 WARNING /CONTROL DEVICE

Prior to operating the Muncher, if any warning or control devices are fitted these must be set in accordance with their specific instructions.

1.7.2 NOISE LEVELS

Guards must be used

The noise sound pressure level will not exceed 70dB at one metre distance from the Muncher. This is based on a typical installation and does not necessarily include noise from other sources or any contribution from building reverberation.

1.8 EXPLOSIVE PRODUCTS/ HAZARDOUS ATMOSPHERES

In certain instances the product being treated may well be of a hazardous nature.

In these installations consideration must be given to provide suitable protection and appropriate warnings to safeguard personnel and plant.

1.9 LUBRICATION

The gearmotor(s) is supplied with the correct type and quantity of lubricant in the gearbox but should be checked before use. For further data see separate information supplied by manufacturer.

Series ‘F’ and ‘H’ bearings and rotary shaft seals are lubricated via greasing points on each bearing housing. The correct quantity of grease is reached when excess

can be seen around the outer lipseal. Other models have sealed for life bearings that do not require maintenance.

Gears should be inspected periodically to see if grease replenishment is necessary, and if so, grease should be added via the grease nipple until the housing is two thirds full.

Only use recommended lubricant shown below for Muncher shaft gears, bearings and rotary seals.

BP Energrease LC2 (-30°C to 180°C) (-22°F to 356°F).

At the following intervals, bearings, gears and seal assembly inspection should take place along with lubricant replenishment;
Series ‘F’, ‘H’, ‘R’ - 7,500 hrs
Series ‘A’, SB, TR - 10,000 hrs

PIPELINE MUNCHERS SHOULD BE ISOLATED BY CLOSING LINE VALVES PRIOR TO SERVICING.

Under tropical or other arduous conditions, however, more frequent lubrication may be necessary. It is therefore advisable to establish a suitable maintenance schedule or periodic inspection to match service conditions.

1.9.1 All CT203 & CT205 TR Munchers require 2 constant level oilers to be fitted to the bearing housing in order to prevent the mechanical seals dry-running. The oilers will be supplied loose with the Muncher to avoid damage during transit, so upon receipt of the equipment they will need to be installed prior to operation. Instructions for fitting the oilers are as follows:

- Completely fill the two mechanical seal cavities through the upper ¼” BSP ports on the bearing housing as per lubrication schedule so that no air is left surrounding the mechanical seals. The two cavities are connected however it may be necessary to fill with oil through both ports due to the intricate path between the two mechanical seal cavities.
- Before attaching the oilers to the bearing housing, ensure the ¼” male nipple is fitted to each oiler and proceed to completely fill the oilers as per lubrication schedule
- Attach the oilers to the ¼” BSP ports and tighten until no oil leaks from the connection.
- Note the level of oil in the oiler and regularly check the oilers to ensure they have not emptied.

Because mechanical seals do have an expected leak rate the oilers will need to be re-filled with oil periodically. The precise level of oil in the oilers is not critical because as long as there is oil visible in the oiler then the seals will be quenched with oil

2.0 START-UP PROCEDURE

By the nature of the equipment and its operating environment the Muncher can be an extremely dangerous machine. It is vital that operators are conversant with these Operation and Maintenance Instructions prior to working with the machine.

Where applicable:

1) Check the foundation bolts are secure once the machine is installed in its correct operating position.

2) Check the gearbox lubricant, remove the plug and fit the air vent to prevent gearbox pressurisation. Not applicable to submersible drive units.

3) Check all electrical connections for continuity and earthing and that installation is in accordance with relevant regulations and circuit diagrams.

4) If a feed hopper is fitted, check that it is secure and installed correctly, and that no personnel can gain access to the moving parts of the machine.

5) Always ensure that machine is guarded in accordance with PD5304: 2000 Safety of Machinery requirements before any attempt is made to operate.

6) Prior to start up ensure all CT203 & CT205 TR Munchers have constant level oilers fitted as per section 1.9.1.

7) On start-up check the direction of rotation of the cutters. The cutters should rotate towards the centre when viewed from the inlet side.

NOTE:

If it is necessary to remove any inspection cover to observe the action – EXTREME CARE should be observed when carrying out this procedure.

8) Check that the Muncher stops when “STOP” button(s) are activated.

9) Check for reverse rotation of cutters when “REVERSE” button is activated.

10) Start up the machine. On initial start-up, allow machine to run for approximately 45 minutes.

11) Start the feed system to the machine. Care should be taken not to overburden the machine. Adjust feed to maintain only the smallest practical reservoir of material in cutter banks.

12) After a further 10 minutes of running, stop the machine, switch off and lock the main isolator. Check the tightness of all securing bolts. Recheck every 500 hours of operating time.

13) Check the tightness of all cables and connections. Re-check every 500 hours of operating time.

14) Observe manufacturers guidelines with regard to gearbox lubricant initial renewal and subsequent intervals.

15) In the event of machine overload (jam), the controller is programmed to activate the following procedure:-

i) Momentarily reverse rotation to clear the condition, then return to normal operation

ii) If overload re-occurs within 60 seconds, reverse rotation to clear the condition, then return to normal operation.

iii) If a third overload occurs within 60 seconds of the first, machine shutdown in reverse mode and energise alarm circuit.

16) After machine shutdown, isolate and lock off. Inspect machine, removing any obstruction and press the "RESET" button.

17) The machine can now be re-started as 10) above.

NEVER inspect or work on or near the cutter chamber without first isolating and locking the machine.

3.0 DISMANTLING AND ASSEMBLY

Section 3 contains the steps to dismantle and reassemble the Muncher. All fastenings must be tightened securely and where identified the appropriate torque figures should be used.

3.1 USE OF ITEMS NOT APPROVED OR MANUFACTURED BY YOUR SUPPLIER

The Muncher and its components have been designed to ensure that the machine will operate safely within the guidelines covered by the legislation.

As a consequence your Supplier has declared the machine safe to use for the duty specified as defined by the Declaration of Incorporation or Conformity that is issued with this Instruction Manual.

The use of replacement items that are not approved by or manufactured by your Supplier may affect the safe operation of the machine and it may therefore become a safety hazard to both operators and other equipment. In these instances the Declaration provided will therefore become invalid. The guarantee referenced in the Terms and Conditions of Sale will also be invalidated if replacement items are used that are not approved or manufactured by your Supplier.

3.2 DISMANTLING ADVICE

(Refer to specified drawings).

CAUTION: When servicing the Muncher, be certain that the mains isolator is off and padlocked. Serious injury could result from accidental start-up.

1) Disconnect wiring at motor(s) terminal box(es) and tag leads for identification.

2) Pipeline models - Isolate the Muncher pipeline by closing line valves before and after the machine.

3) If necessary, the Muncher may be completely removed from installation using the recommended lifting equipment.

4) Pipeline models - Replace the pull back assembly with the maintenance period screen (MPS) if required.

5) When dismantling cutters and spacers, take careful note of the position and orientation of each component.

3.3 CLEANING / INSPECTION

TR MUNCHERS ONLY

It is important to periodically inspect (timeframe dependant on usage) the trash trap for any grit build up. If grit is present in the trash trap the grit should

be removed and cleaned to ensure optimal care and working performance. See page 14 for more details.

ALL MUNCHERS

1) Steam clean and disinfect all parts of the Muncher excluding motor, seal assemblies, gear drive unit and bearings.

2) Remove any gasket material from joint faces.

3) Housings should be cleaned thoroughly.

4) Inspect all parts for excessive wear and replace if necessary.

5) Sealed bearings cannot be re-greased, replace if necessary.

6) Check and if necessary replace the internal 'O'rings, lipseals and mechanical seals.

7) Inspect gears for wear and damage and replace if necessary.

8) All cutters and spacers must be clean and free from cracks or excessive wear.

9) Shafts should be clean and any burrs filed off for easier stacking. Inspect shafts for excessive wear of hexagonal portion. Replace if necessary.

3.4 REASSEMBLY ADVICE

1) Lubricate all bores, shafts and seals on reassembly.

2) Lubricate gears on re-assembly with the specified lubricant.

3) Reconnect wiring at motor(s) terminal box(es) using tag leads for identification.

4) Re-open system isolation valves.

5) On completion of assembly, run through the 'initial start-up' procedure on page 11.

TR MUNCHERS ONLY

25° CUTTER STACK AND TRASH TRAP (CT201,CT206 & CT205 ONLY)

The cutter stack is inclined at 25° from the vertical axis to allow any unbreakable solids to drop clear of the cutters into the trash trap on reversal side of the cutter stacks. the solids can then be manually removed once the machine has been isolated (mechanically and electrically).

The unique internal trash trap built into the main body of the machine (patent pending), has access covers placed on either side for easy clean out.

Access cover plates drilled to suit standard NP16 50mm diameter flange to allow hosetail or similar to be fitted for flushing exercise when required.

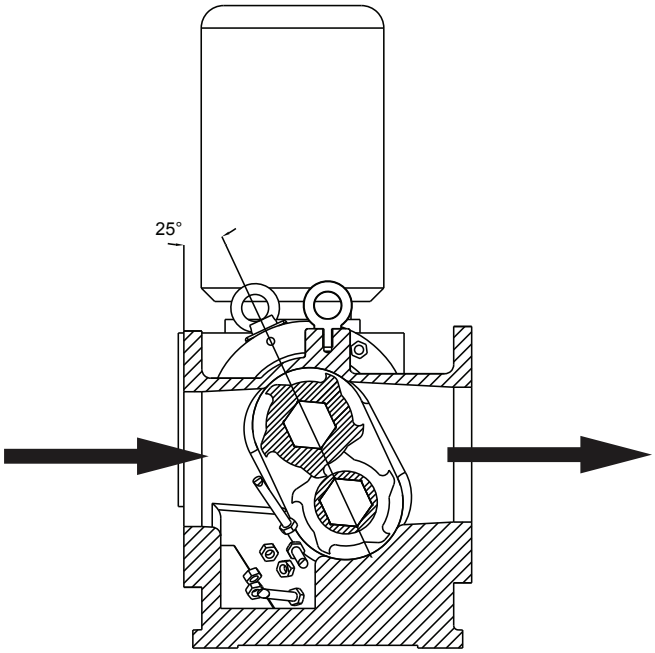

CT201

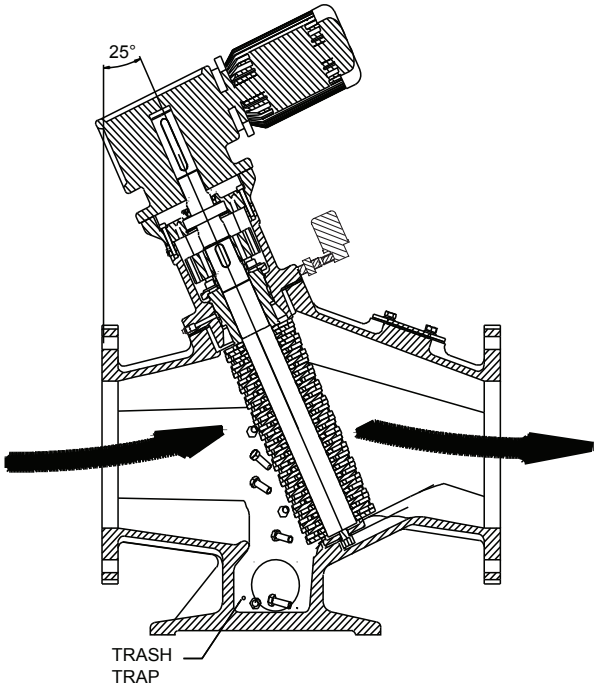

CT203 & CT205

CLEAN OUT FACILITY (TR MUNCHER ONLY)

Using the two clean out access ports, flanged hoses and valves can be fitted to give an automatic flushing sequence at sites where grit/solids are known to cause problems.

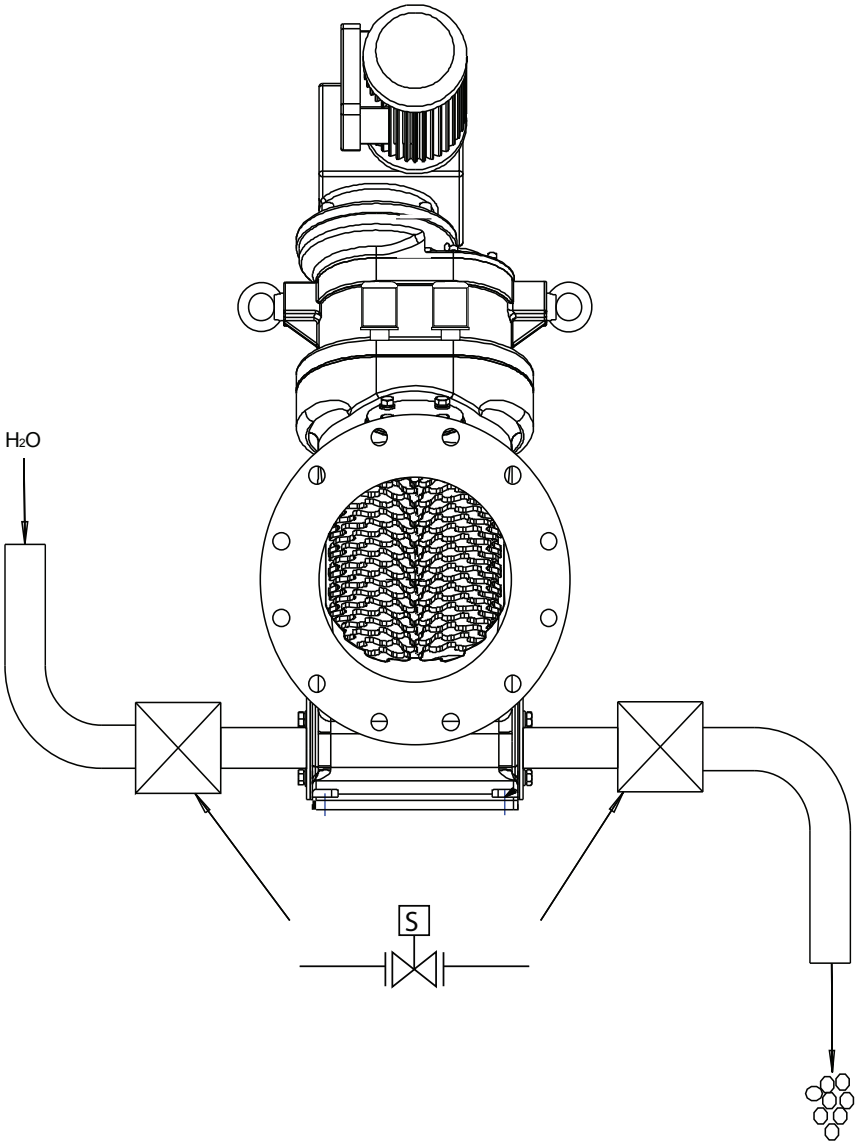

Weights

Muncher	Type	Gear Unit / Class	M/C Size (kW)	Weight (kg)
Series A	CA202AA CA203AA CA205AA CA206AA CA210AA CA215AA	IP55	2	241 251 276 286 351 400
	CA202AB CA203AB CA205AB CA206AB CA210AB CA215AB	IP55	2	254 264 284 294 369 439
	CA202AC CA203AC CA205AC CA206AC CA210AC CA215AC	IP55	4	265 275 295 305 380 450
Series F	CF306RJS7B2 CF310RMS7B2	Nord IP55	11 7.5 & 11	780 1180
Series H	CH06 CH09 CH12	Nord IP55	11 & 15 15 & 22	1800 2300 2800
SB	Pipeline CB201	IP55	1.1 1.5 2.2	205 207 244
		IP55	1.1 1.5 2.2	208 244 248
	Channel CB201A	IP55	1.1 1.5 2.2	155 190 195
		IP67 & IP68	1.1 1.5 2.2	200 225 260
TR	CT203C	IP55	1.5 2.2 / 4.0	290 340
	CT203D	IP55	1.5 2.2 / 4.0	290 340
	CT203E	IP55	1.5 2.2 / 4.0	290 340
	CT205F	IP55	1.5 2.2 / 4.0	345 390
	CT205G	IP55	1.5 2.2 / 4.0	345 390
R	CR145A	IP55	8	800

Muncher	Type	Gear Unit / Class	M/C Size (HP)	Weight (lb)
Series A	CA202AA CA203AA CA205AA CA206AA CA210AA CA215AA	TEFC	2	531 553 608 630 773 881
	CA202AB CA203AB CA205AB CA206AB CA210AB CA215AB	TEFC	3	559 582 626 648 813 967
	CA202AC CA203AC CA205AC CA206AC CA210AC CA215AC	TEFC	5	584 606 650 672 837 992
Series F	CF306RJS7B2 CF310RMS7B2	TEFC	15 10 & 15	1719 2601
Series H	CH06 CH09 CH12	TEFC	15 & 20 / 20 & 30	3968 5070 6172
SB	Pipeline CB201	TEFC	1.5 2 3	451 456 537
		SUBMERSIBLE	1.5 2 3	458 537 546
	Channel CB201A	TEFC	1.5 2 3	341 418 429
		SUBMERSIBLE	1.5 2 3	440 496 573
TR	CT203P	TEFC	2 3 / 5	639 749
	CT203Q	TEFC	15 10 & 15	639 749
	CT203R	TEFC	15 10 & 15	639 749
	CT203S	TEFC	15 10 & 15	760 859
	CT203T	TEFC	15 10 & 15	760 859
R	CR145A	TEFC	10	1763

Wiring Diagram

CT201, CT203 & CT205

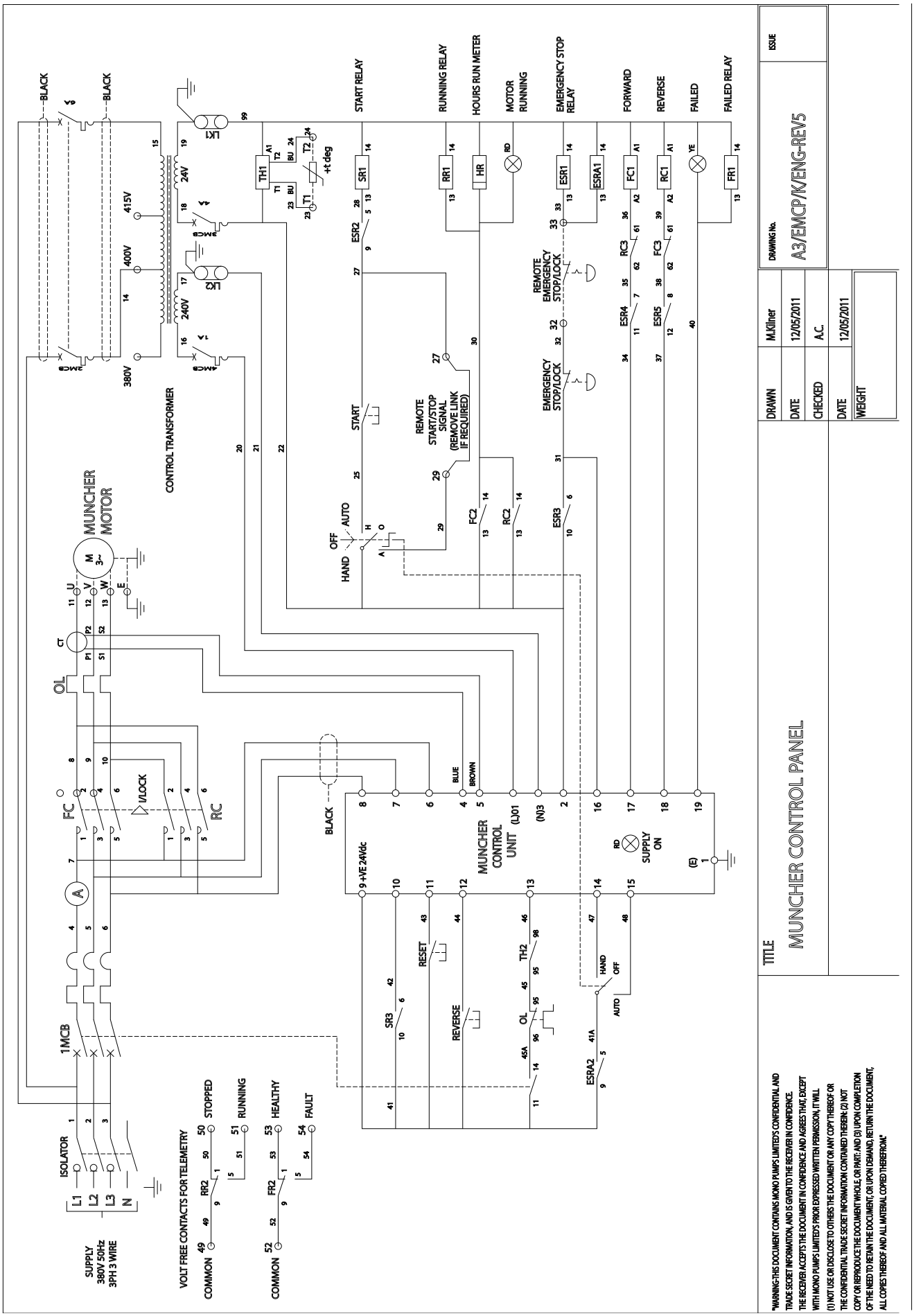

Torque Tightening Table for Fasteners

DESCRIPTION	THREAD SIZE	PART No.(s)	MAX. TIGHTENING TORQUE	
			Nm	lbf.ft.
TOP COVER PLATE BOLT	M8x1.25	P101	29	22
TOP COVER PLATE BOLT	M8x1.25	P103	29	22
BEARING HOUSING BOLT	M12x1.75	P105	101	76
DRIVESHAFT BOLT	M16x2	P115	125	92
DRIVEN SHAFT BOLT	M16x2 (L.H.)	P117	125	92
SEAL PLATE BOLT	M12x1.75	P119	101	76
INSPECTION COVER BOLT	M16x2	P400	125	92
MOTOR MOUNT BOLT	M12x1.75	P501	101	76

Torque tolerances are +/- 5% of stated values.

Assembly/Re-Assembly Advice

1. Use anti-seize compound on shafts.
2. Ensure correct orientation of bearing housing drain holes.
3. When viewed from drain holes side, drive shaft is to the right.
4. Where necessary use jacking screw holes to remove difficult components.
5. Observe the cutter stacking table guidelines below.

CUTTER STACKING TABLE

MODEL / TOOTH WIDTH	DRIVE SHAFT				DRIVE SHAFT			
	CUTTERS	SPACERS	START TOP	FINISH BOTTOM	CUTTERS	SPACERS	START TOP	FINISH BOTTOM
CT203-W A2	22	21	CUTTER	CUTTER	21	22	SPACER	SPACER
CT203-W B2	51	51	SPACER	CUTTER	51	51	CUTTER	SPACER

Muncher Coding

Features	Description	Basic Code												Variation		
		1	2	3	4	5	6	7	8	9	10	11	12	13	14	15
Body Material	Cast Iron	C														
	Stainless Steel	S														
Product	TR Muncher		T													
Mark No.	1996			2												
Throat Size	100mm (4")				0	0										
	150mm (6")				0	1										
	300mm (12")				0	3										
	500mm (20")				0	5										
Machine Type & Flange Bore (Metric Flanges Drilled to BS4504 PN16 & Imperial Flanges Drilled to ANSI B16.5 Class 150)	Pipeline 100 N.B. to BS4504						C	CT200, CT201 & CT203 ONLY								
	Pipeline 150 N.B. to BS4504						D	CT201 & CT203 ONLY								
	Pipeline 200 N.B. to BS4504						E	CT203 ONLY								
	Pipeline 250 N.B. to BS4504						F	CT205 ONLY								
	Pipeline 300 N.B. to BS4504						G	CT205 ONLY								
	Pipeline 4" N.B. ANSI						P	CT203 ONLY								
	Pipeline 6" N.B. ANSI						Q	CT201 & CT203 ONLY								
	Pipeline 8" N.B. ANSI						R	CT203 ONLY								
	Pipeline 10" N.B. ANSI						S	CT205 ONLY								
	Pipeline 12" N.B. ANSI						T	CT205 ONLY								
Motor	Gear Unit c/w 1.5kW Motor							A								
	Gear Unit c/w 2.2kW Motor							B								
	Gear Unit c/w 4kW Motor							C								
	Gear Unit c/w 2HP Motor							D								
	Gear Unit c/w 3HP Motor							E								
	Gear Unit c/w 5HP Motor							F								
	Gear Unit c/w 0.75kW Motor							G								
Cutter	ETOS								W							
	NON ETOS								T							
No. of Teeth	5									5						
	7									7						
	9									9						
	11									1						
	5 (DRIVE) & 9 (DRIVEN)									2						
Thickness	5.5mm (0.2165")										A					
	8.0mm (0.3150")										B					
	4.9mm (0.1929")										E					
Material (Cutters)	Stainless Steel											1				
	Chromium Molybdenum Steel											2				
Oblique													/			
Field Variation														V	A	R
Typical Code		C	T	2	0	3	D	*	T	1	B	2	/	1	2	3
Please note - 100NB flanges are available on CT201D but require flange adaptors which will affect the length																

Stacking Arrangement for Cutters

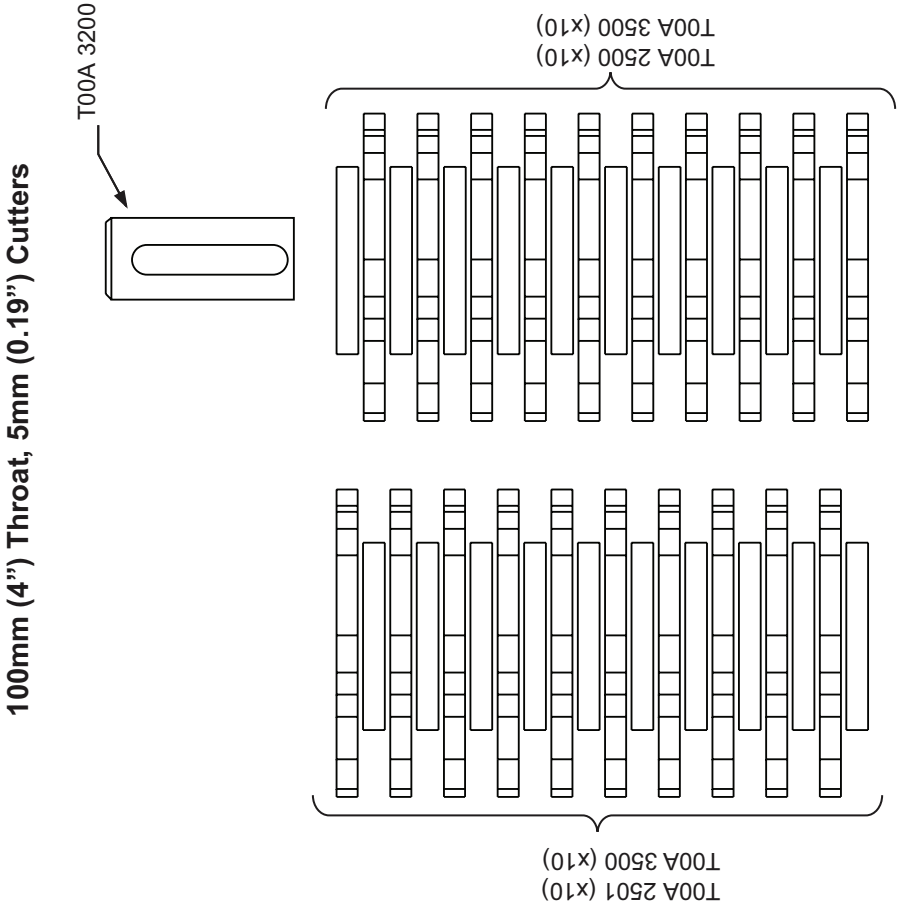

150mm (6”) Throat, 5.5mm (0.21”) Cutters

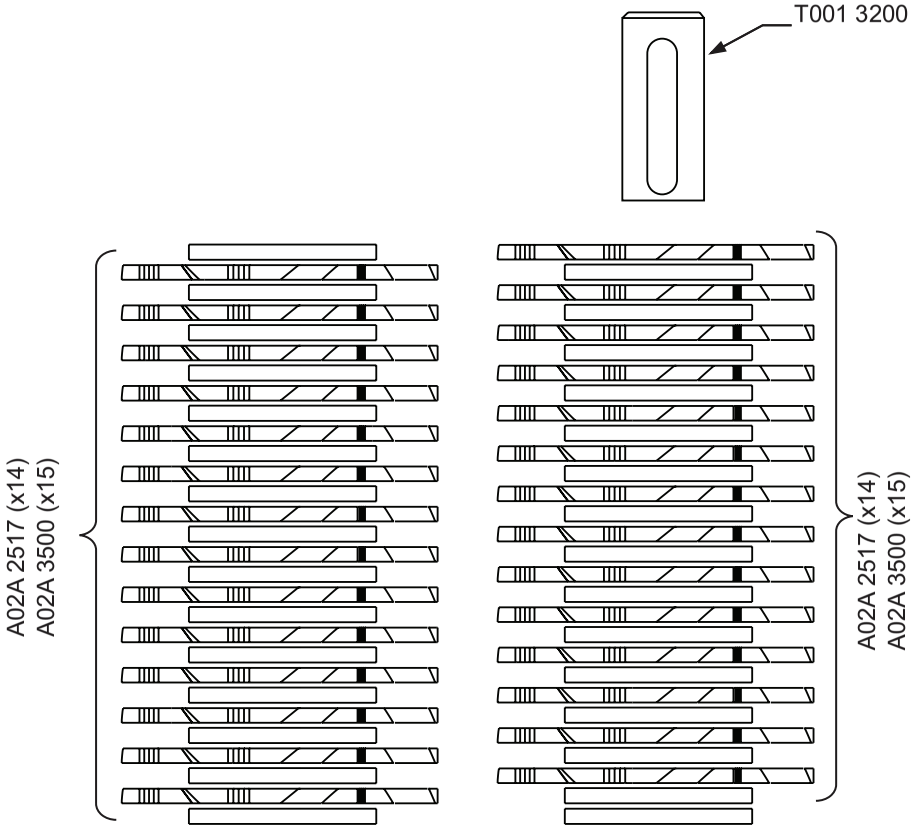

150mm (6”) Throat, 8mm (0.31”) Cutters

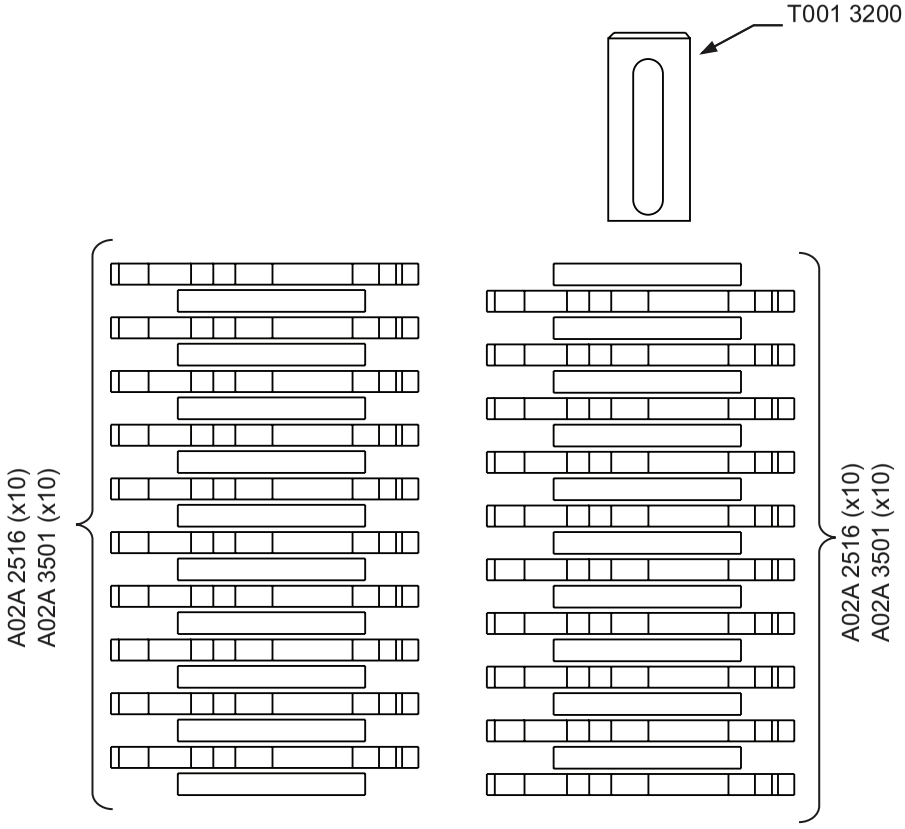

300mm (12”) Throat, 5.5mm (0.21”) Cutters

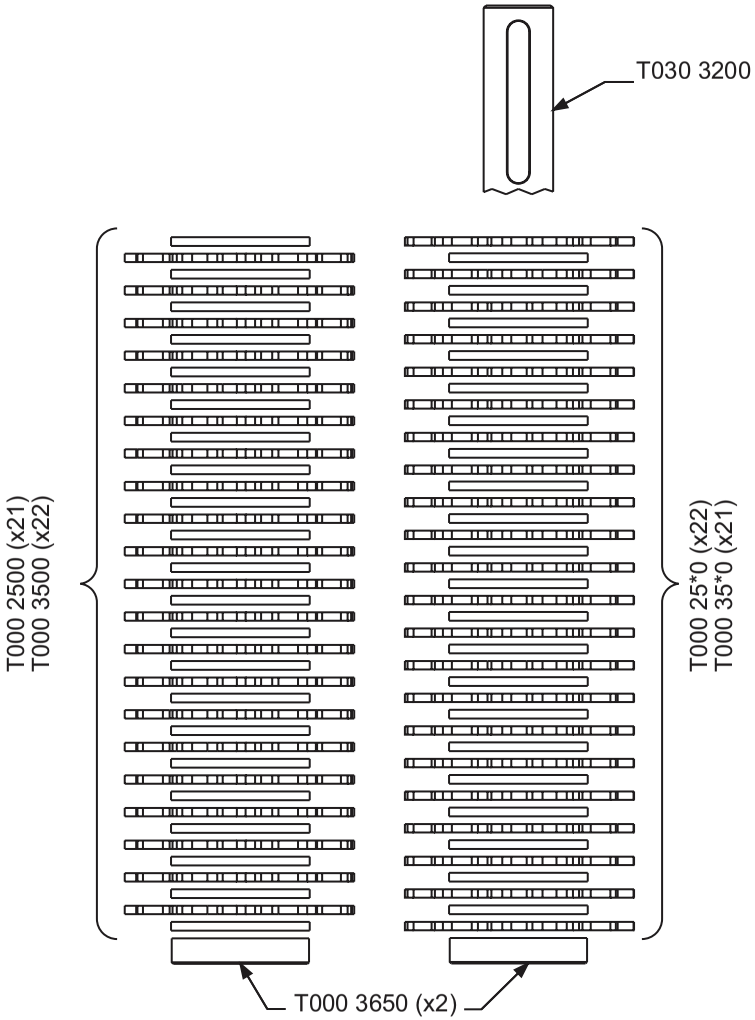

305mm (12”) Throat, 5.5mm (0.21”) Cutters with Bottom Support Bearing

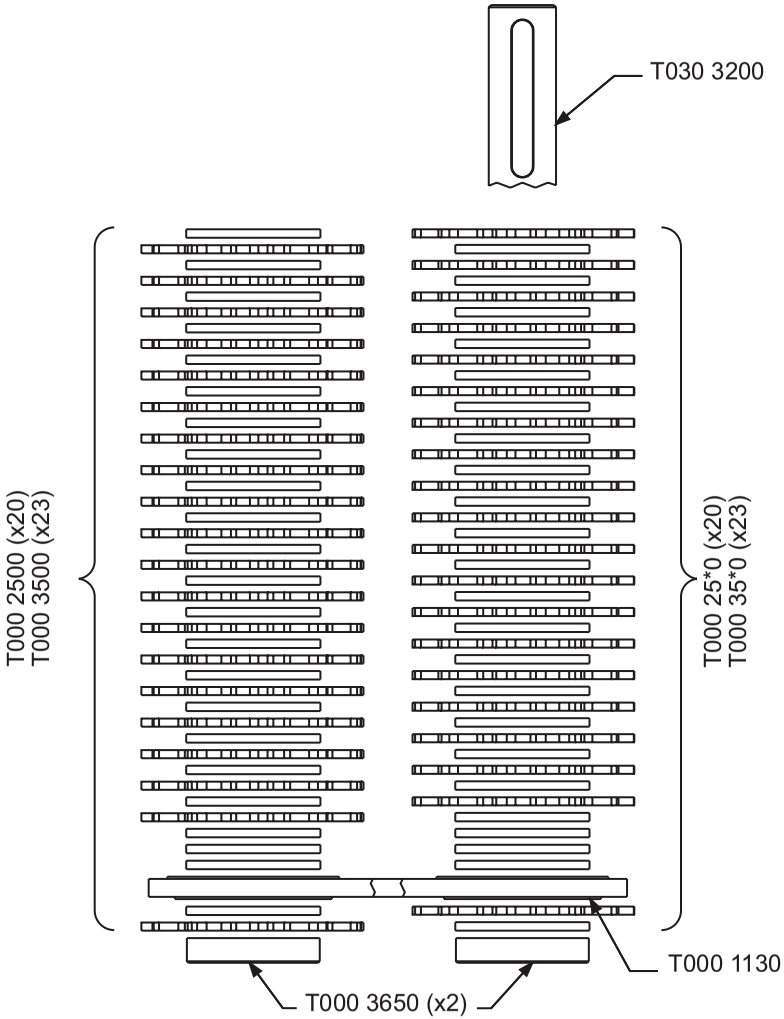

305mm (12”) Throat, 8mm (0.31”) Cutters

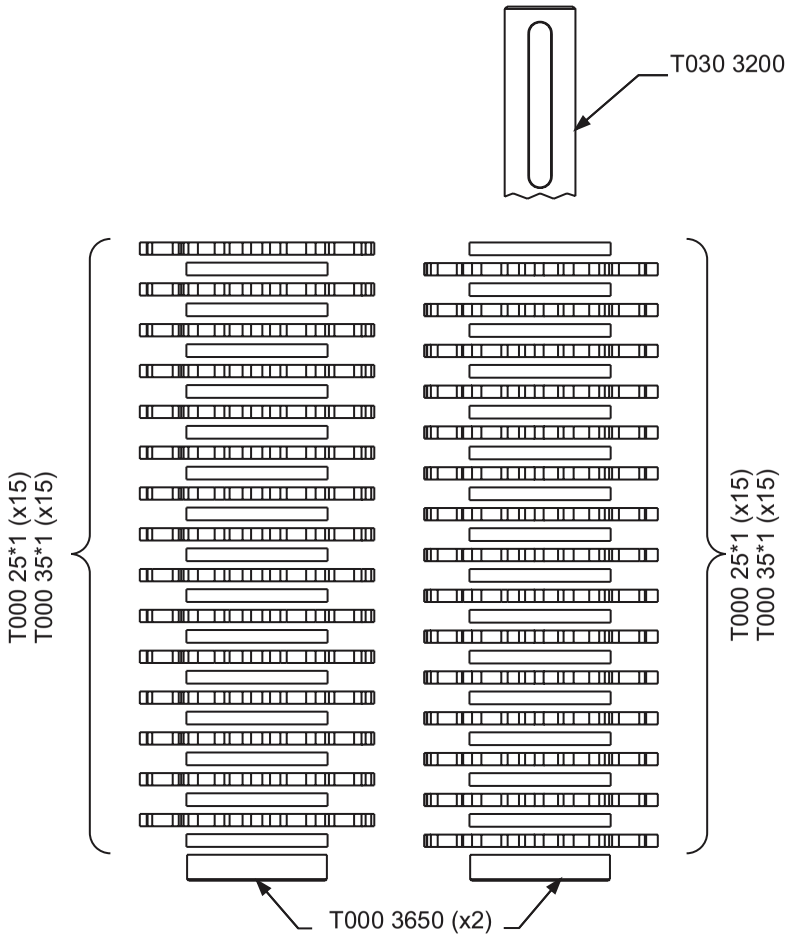

305mm (12”) Throat, 8mm (0.31”) Cutters with Bottom Support Bearing

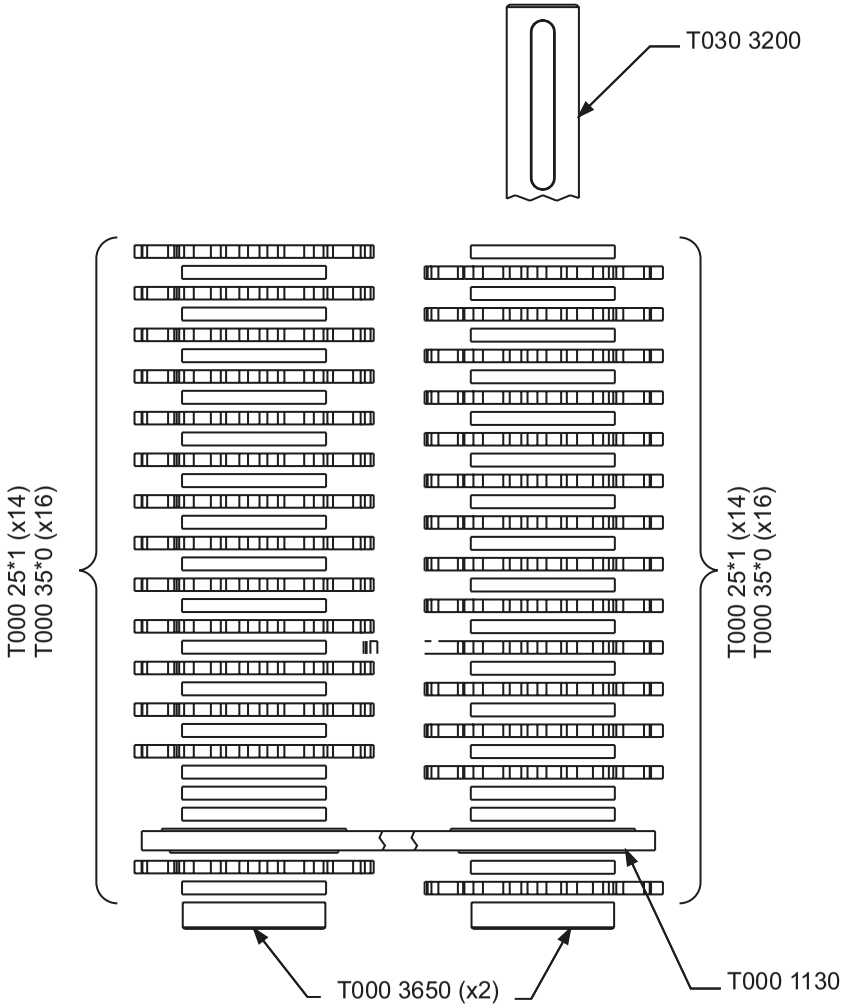

500mm (20”) Throat,
5.5mm (0.21”) Cutters

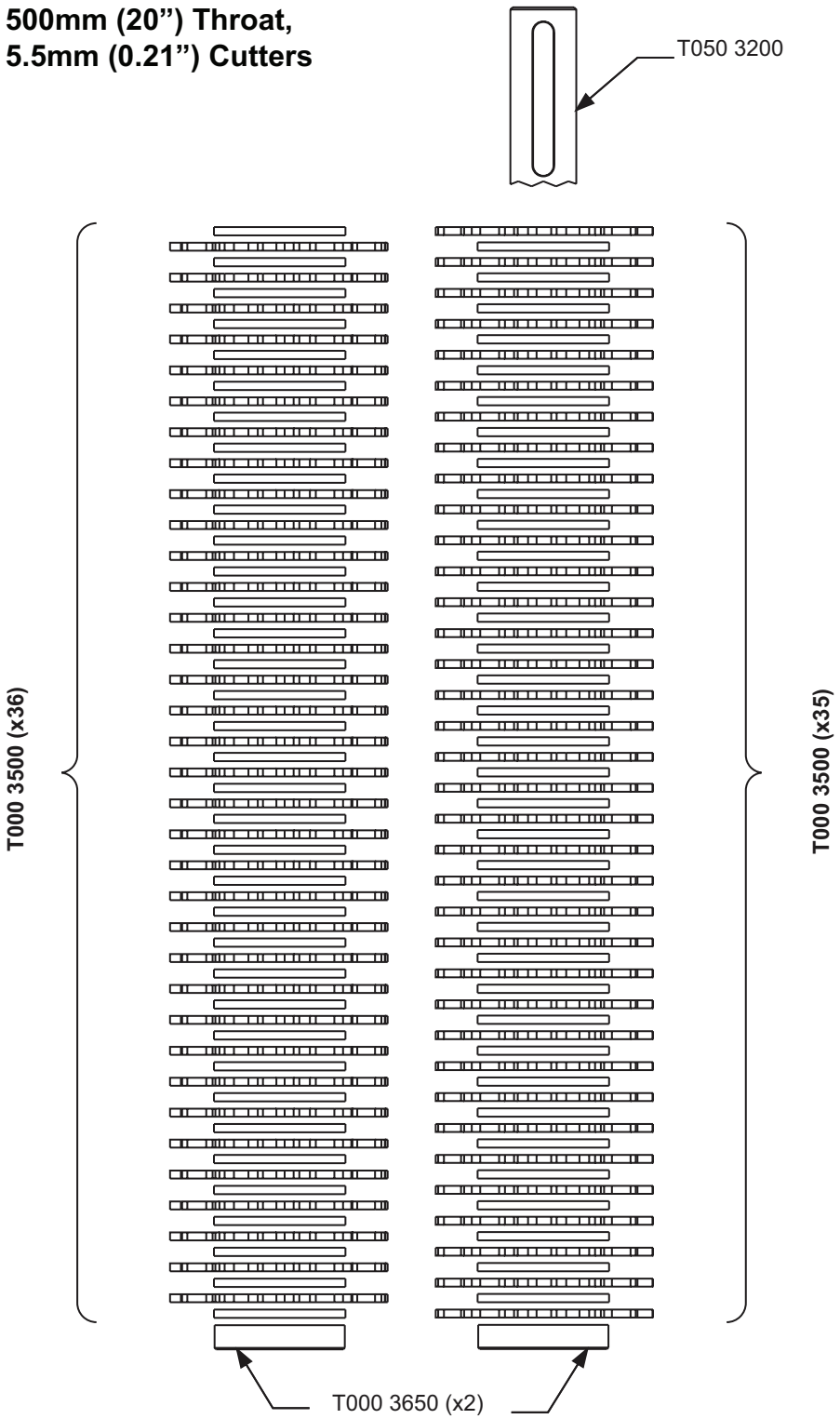

500mm (20”) Throat,
5.5mm (0.21”) Cutters
with Bottom Support Bearing

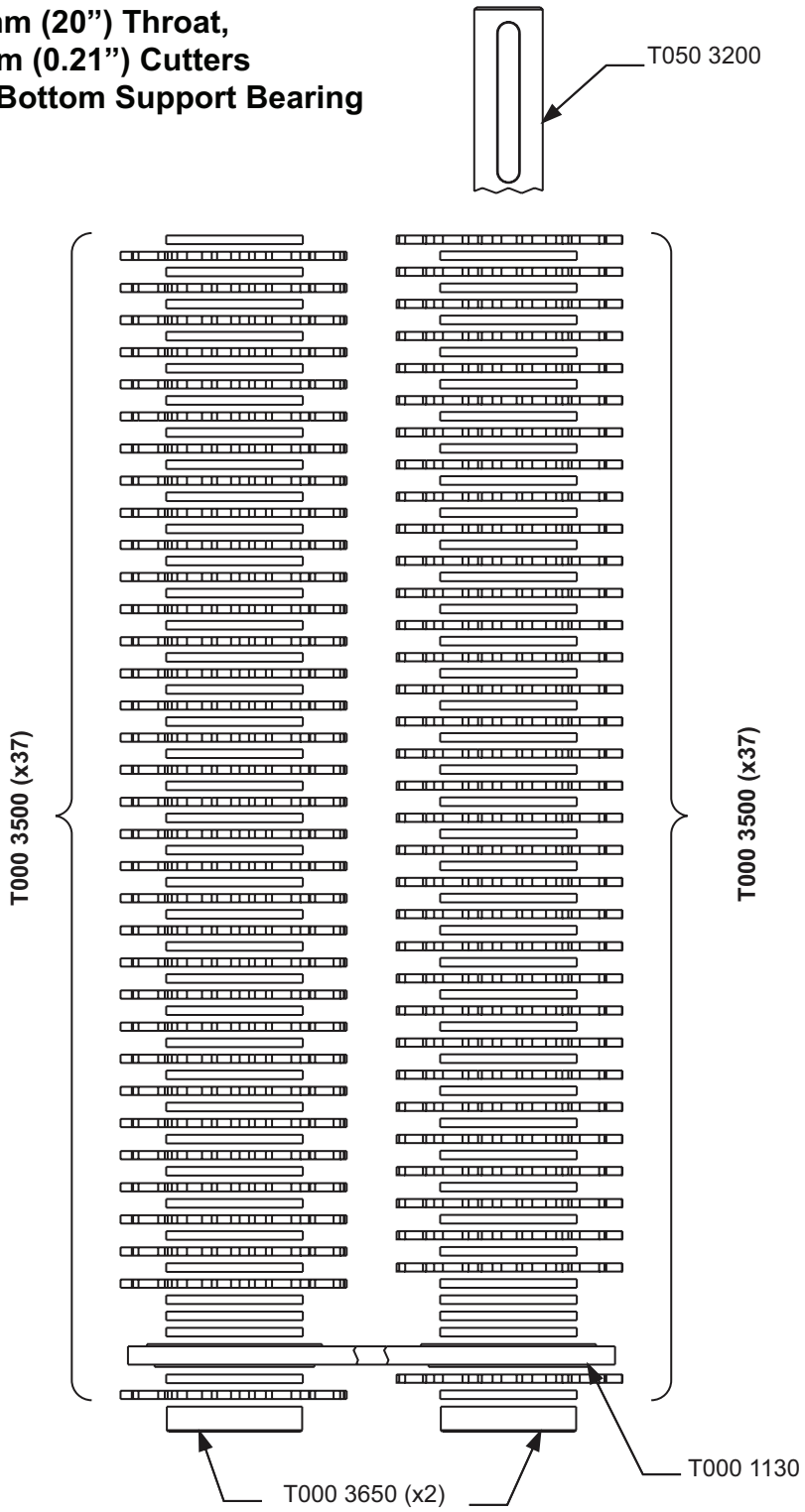

500mm (20”) Throat, 8mm (0.31”) Cutters

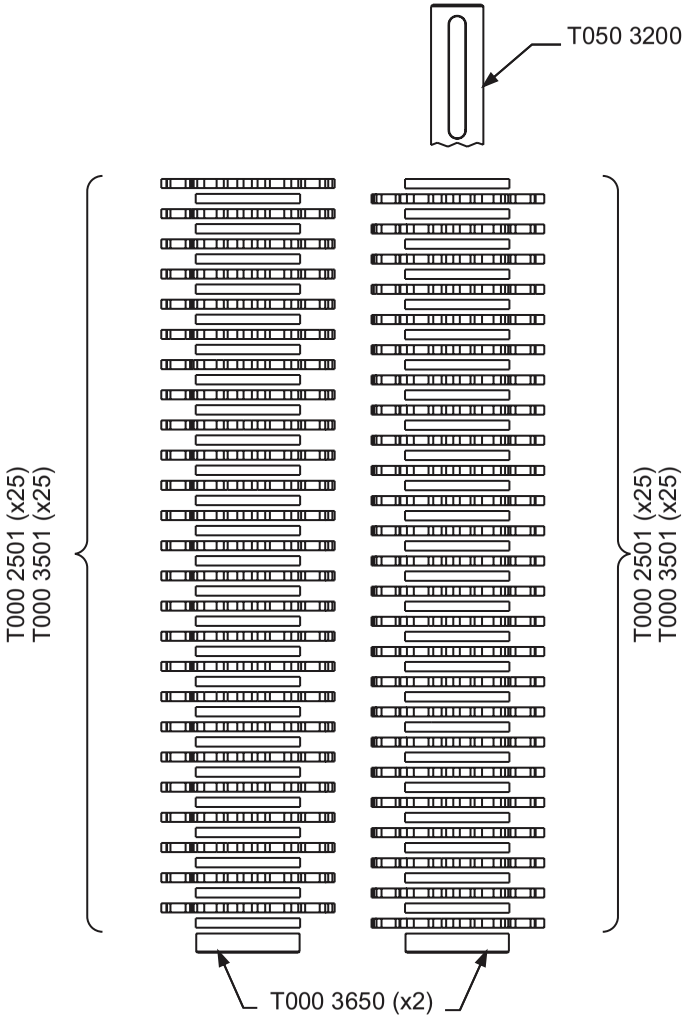

500mm (20”) Throat, 8mm (0.31”) Cutters with Bottom Support Bearing

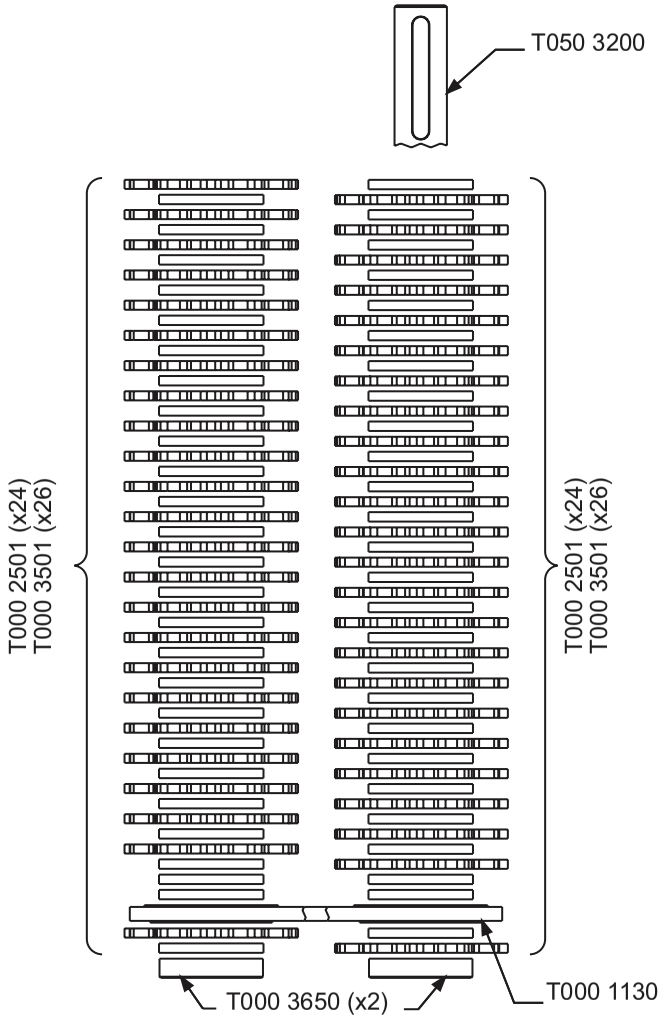

Dismantling

CT203 & CT205

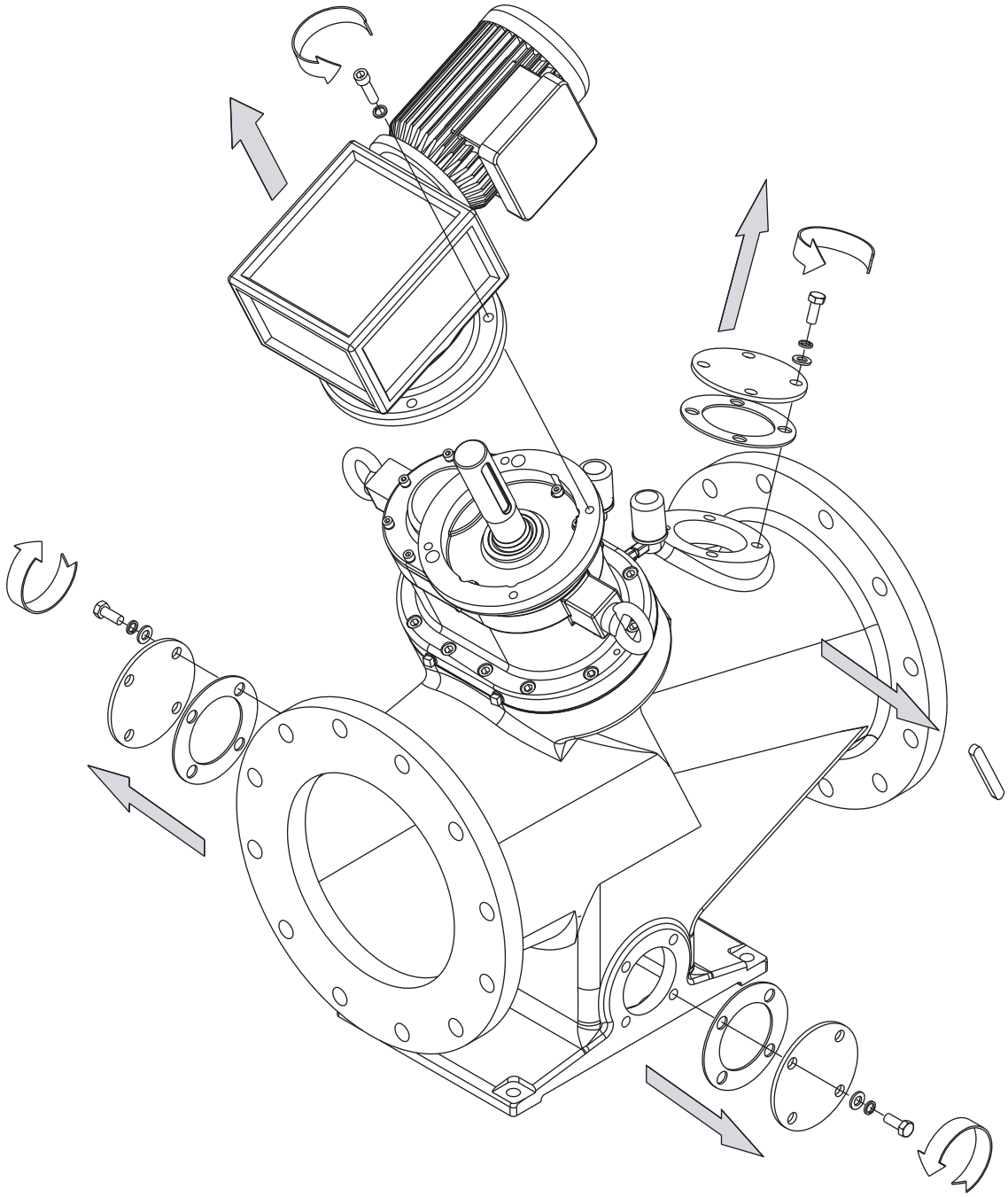

CT201

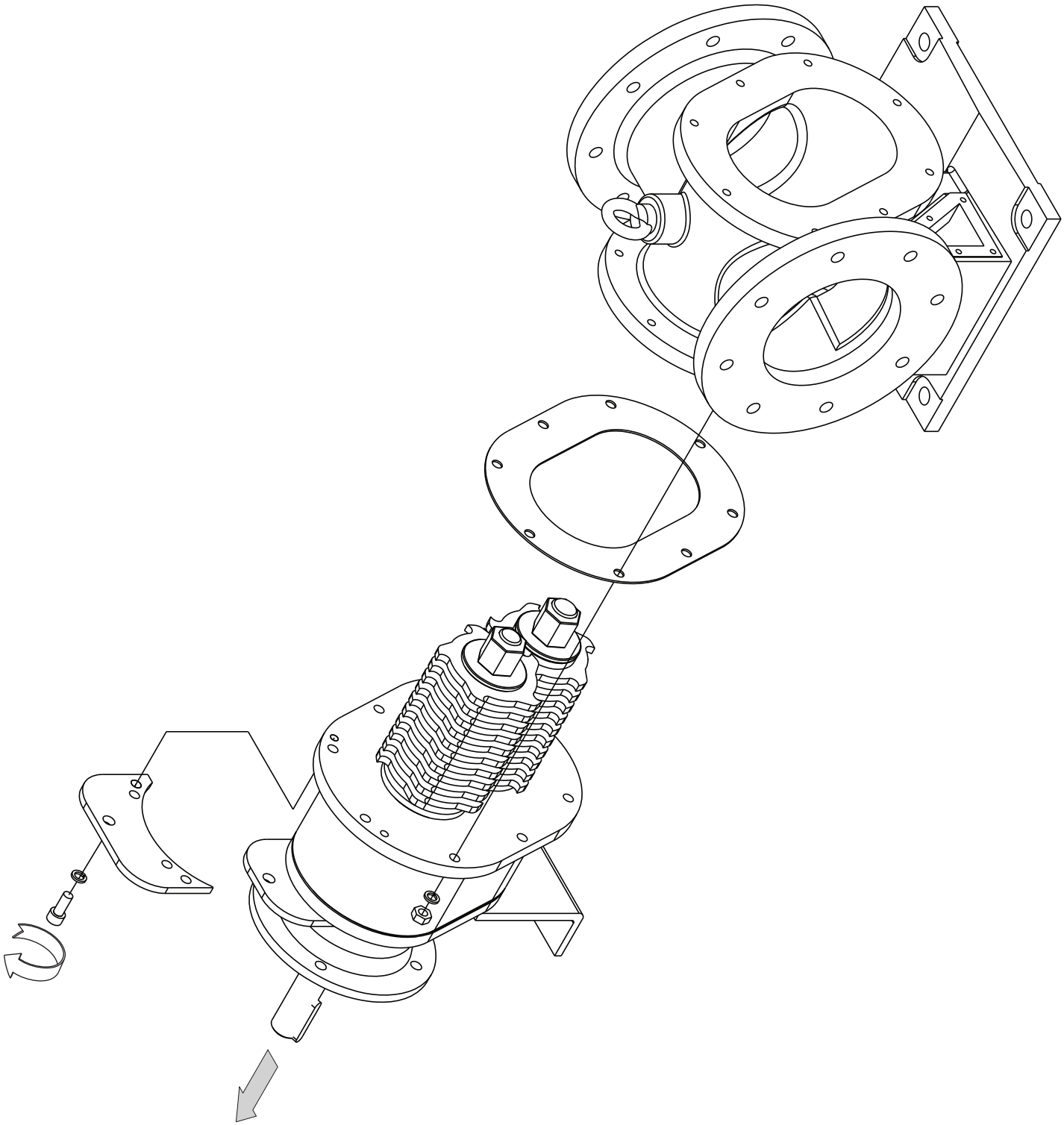

CT203 & CT205

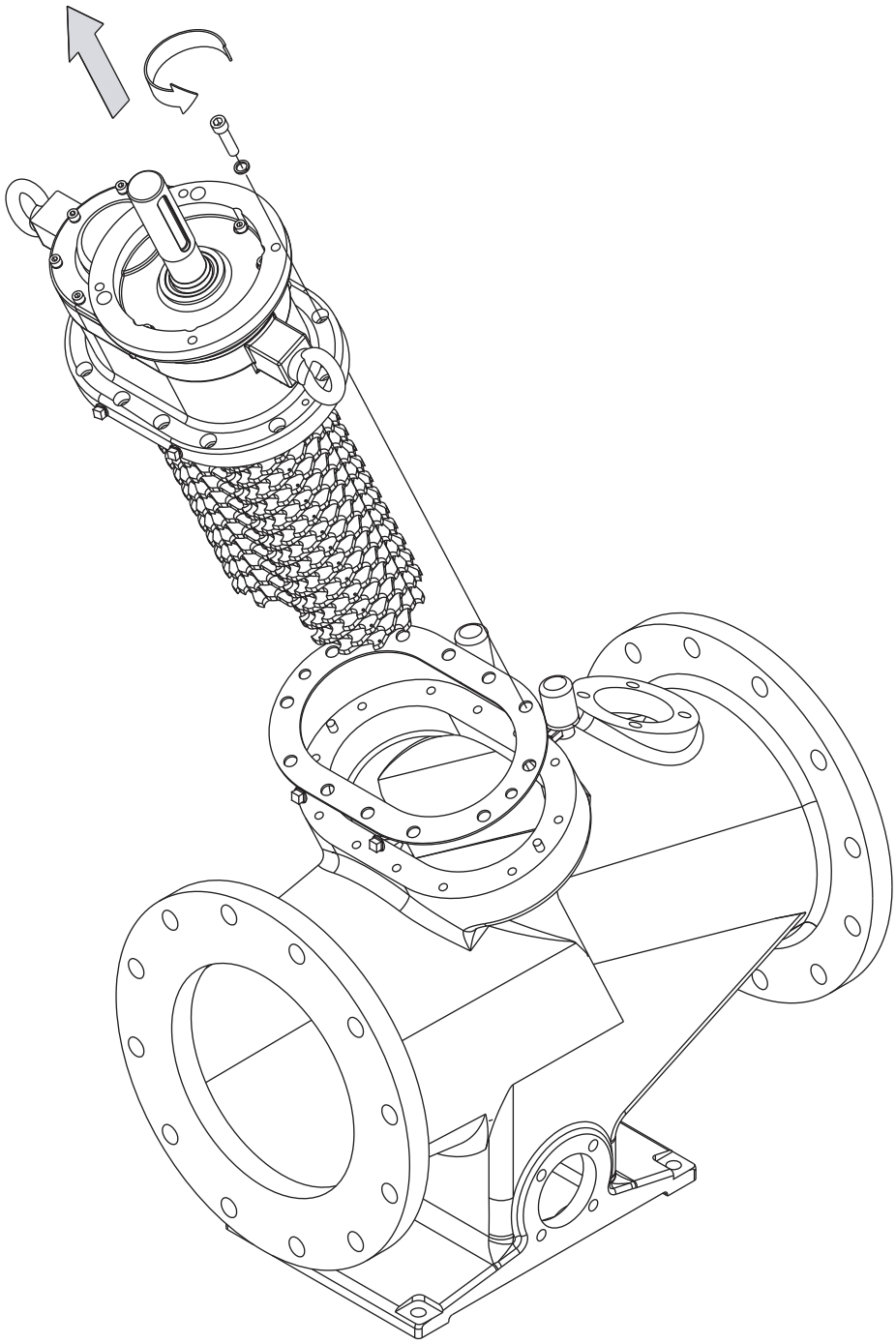

CT201

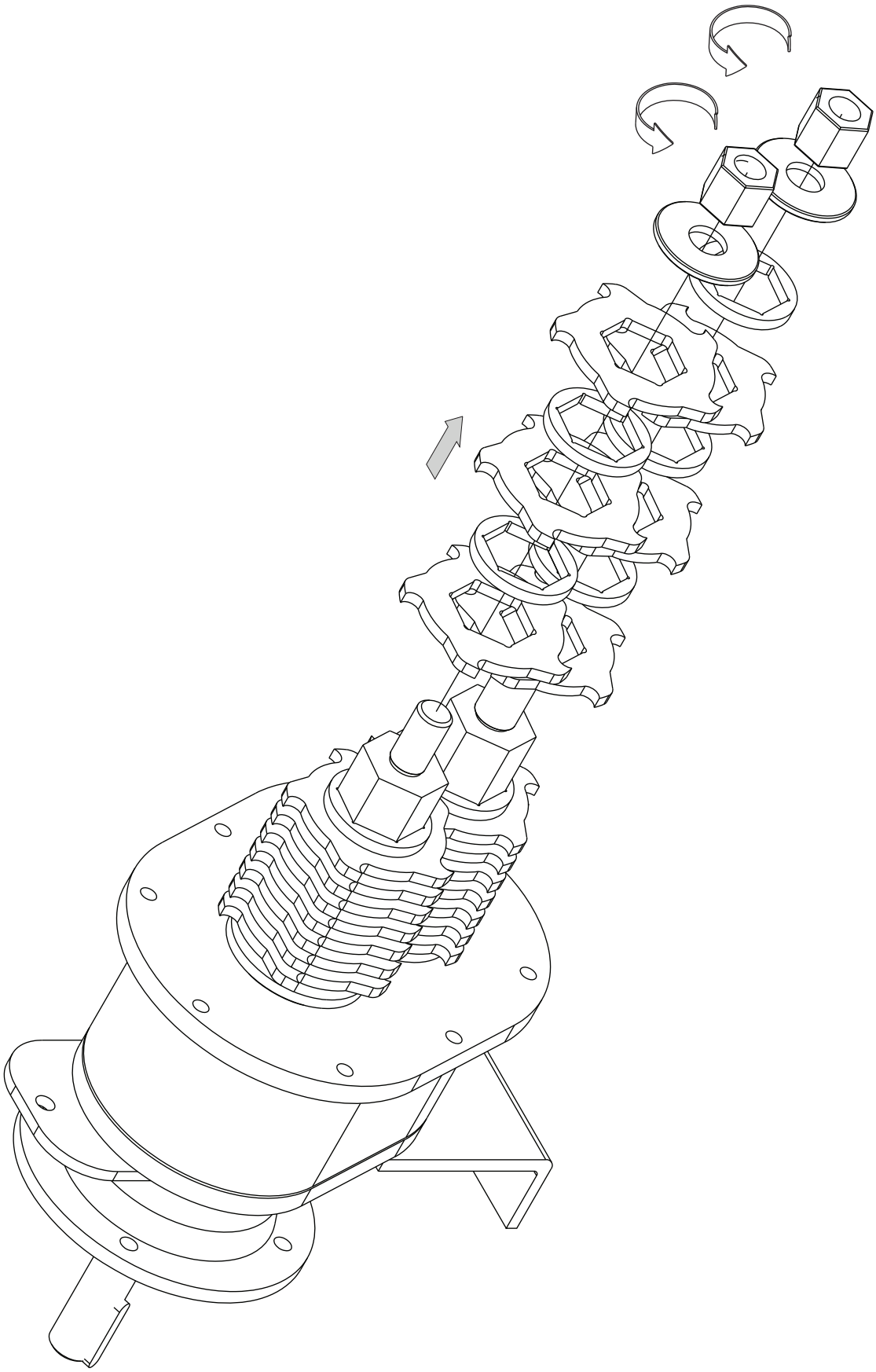

CT203 & CT205

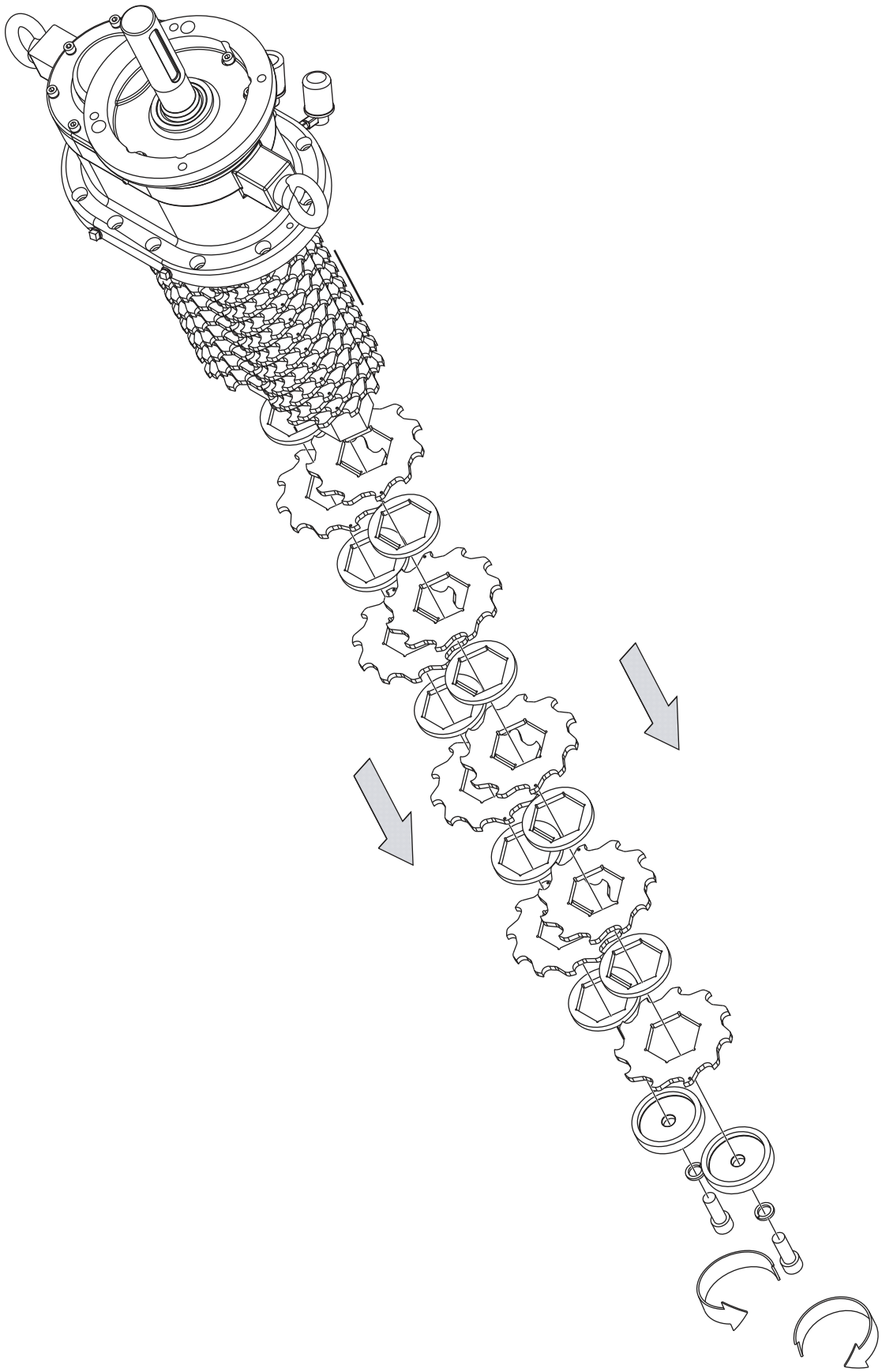

CT201

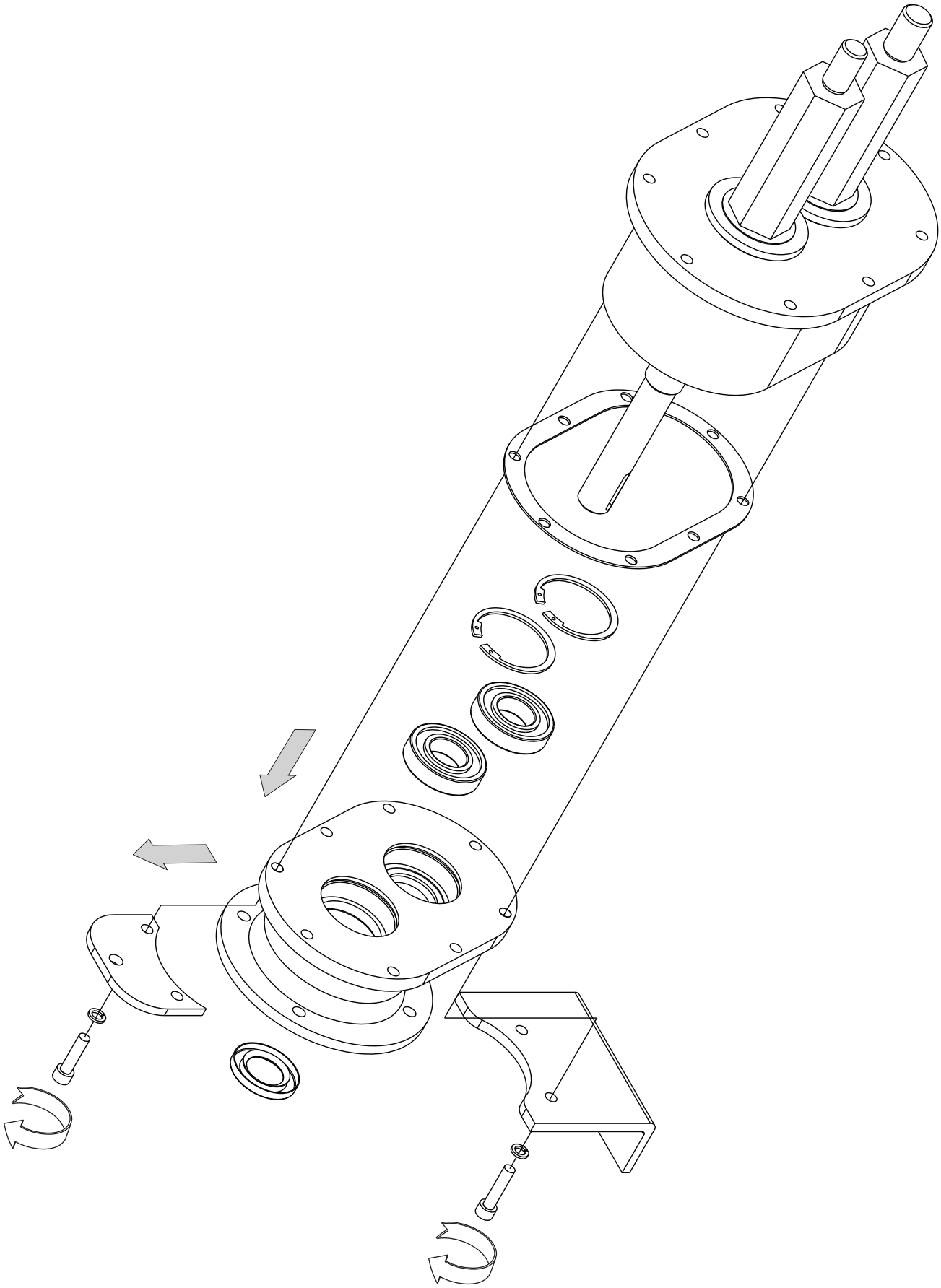

CT203 & CT205

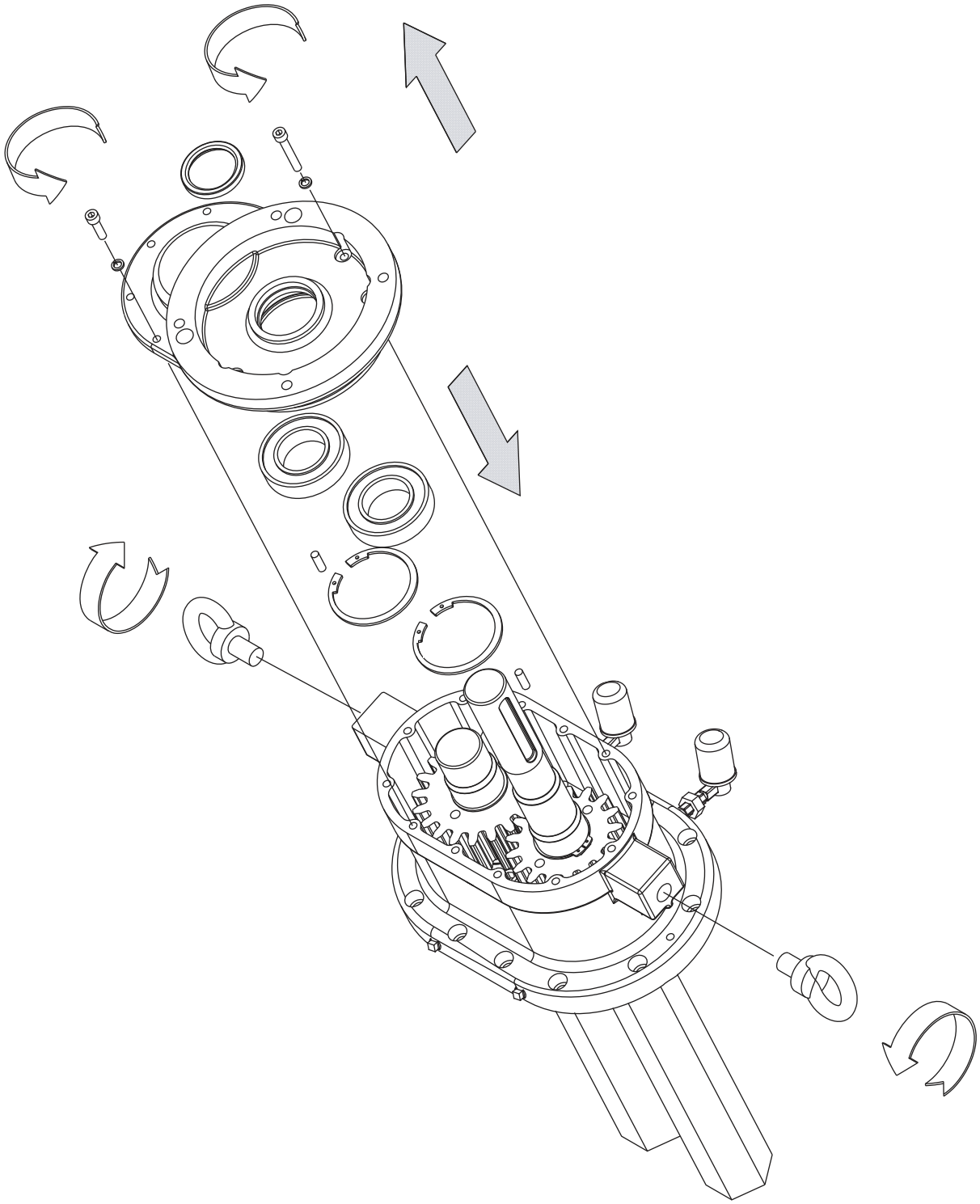

CT201

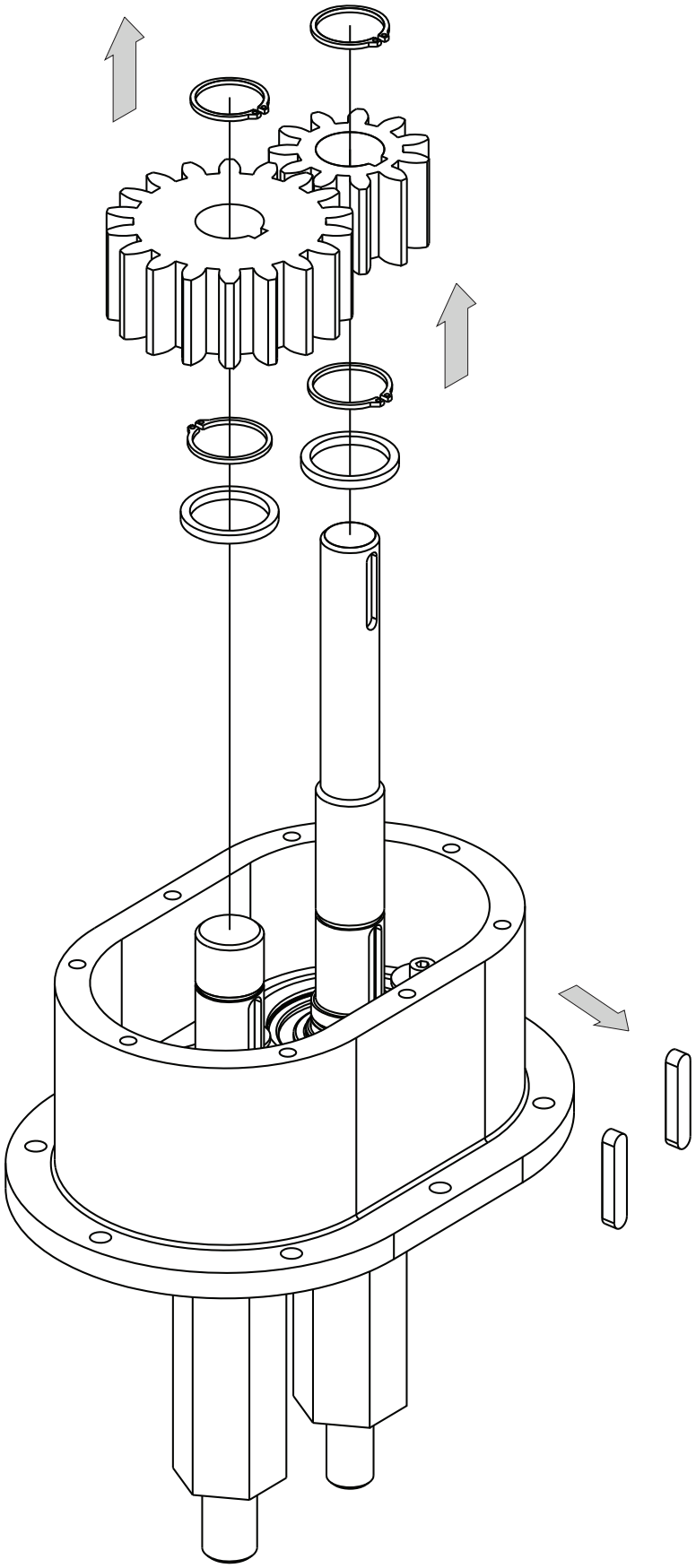

CT203 & CT205

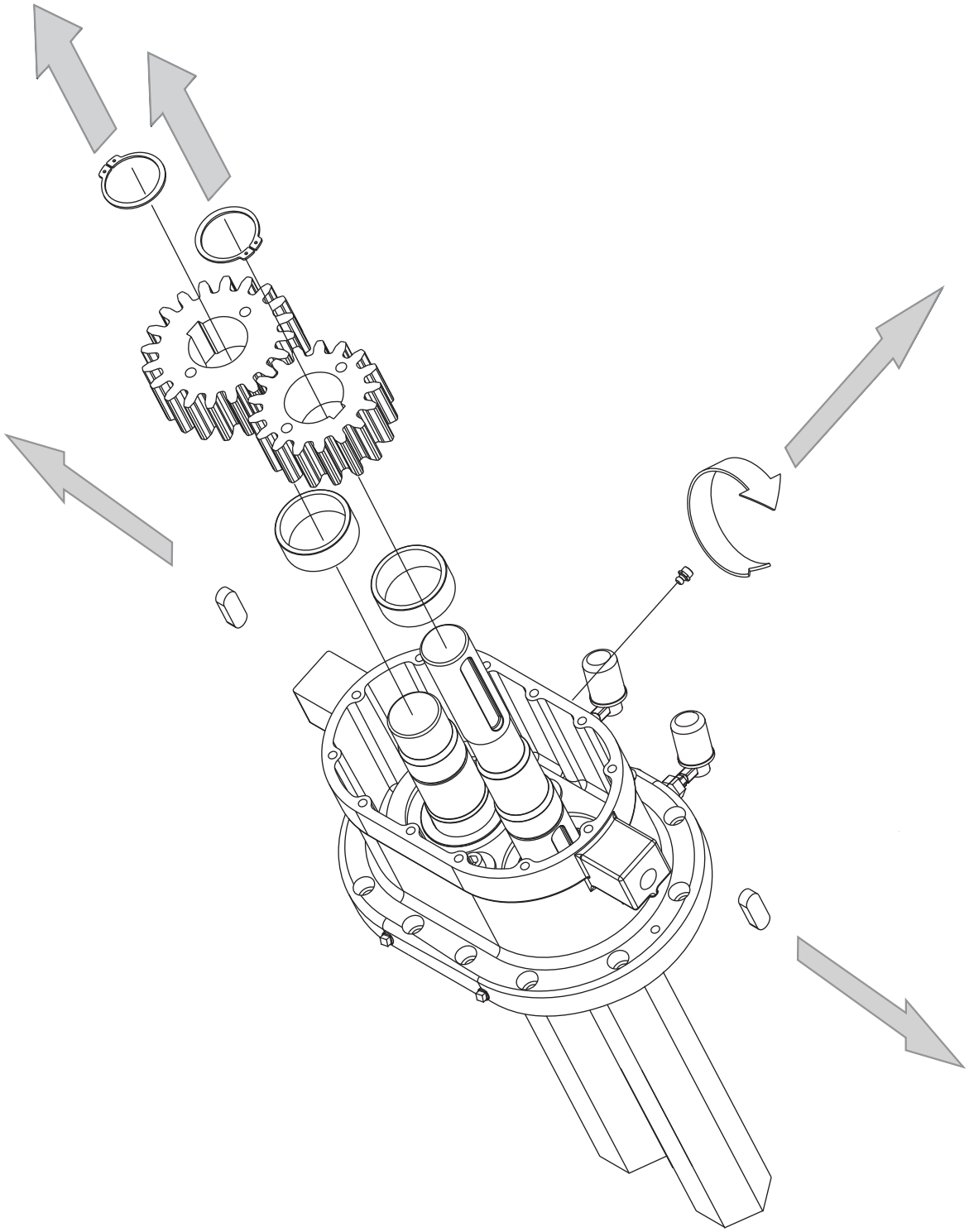

CT201

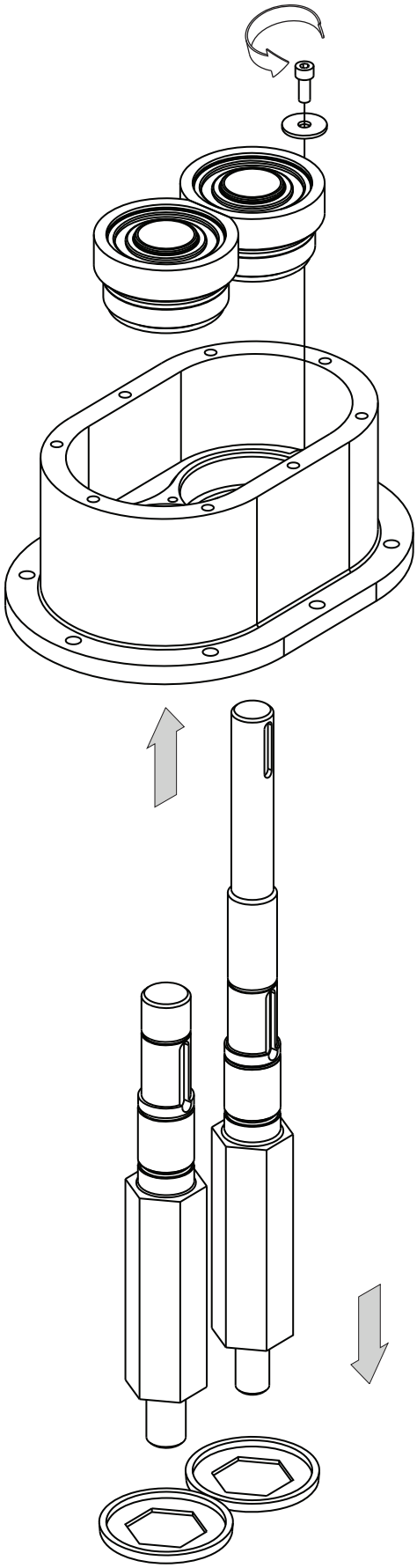

CT203 & CT205

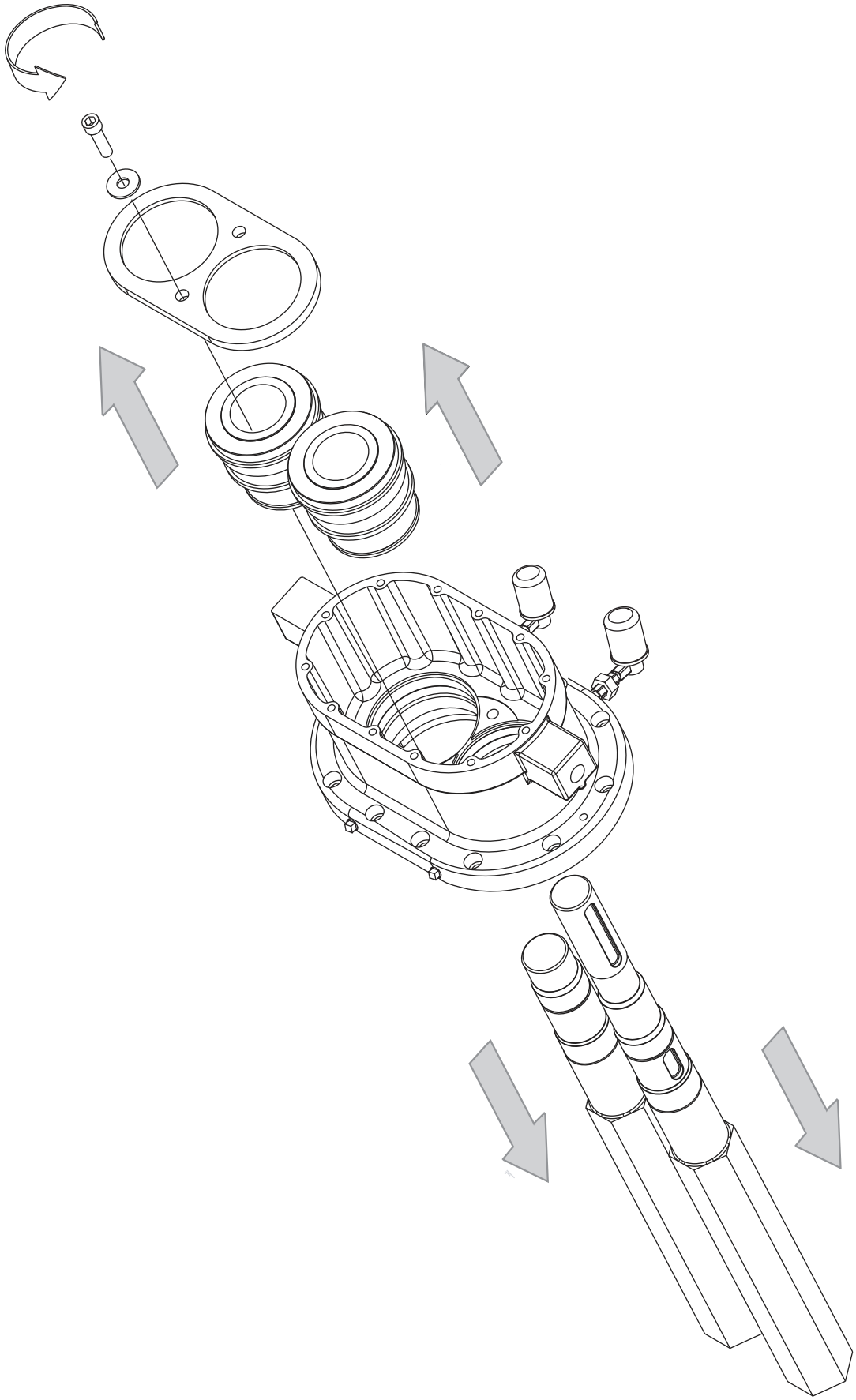

Assembly

CT201

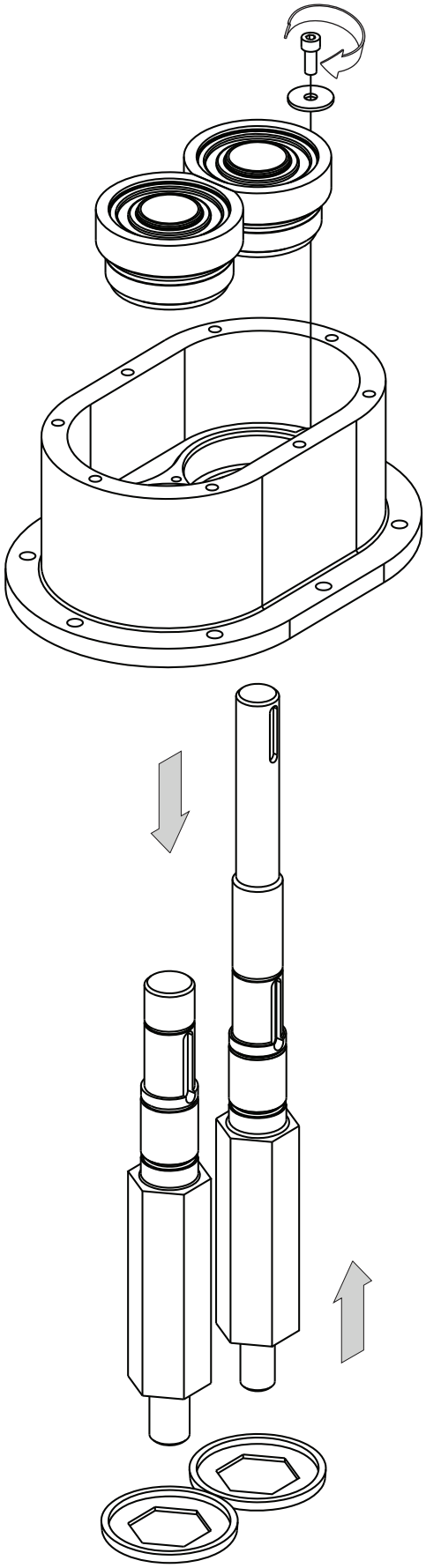

CT203 & CT205

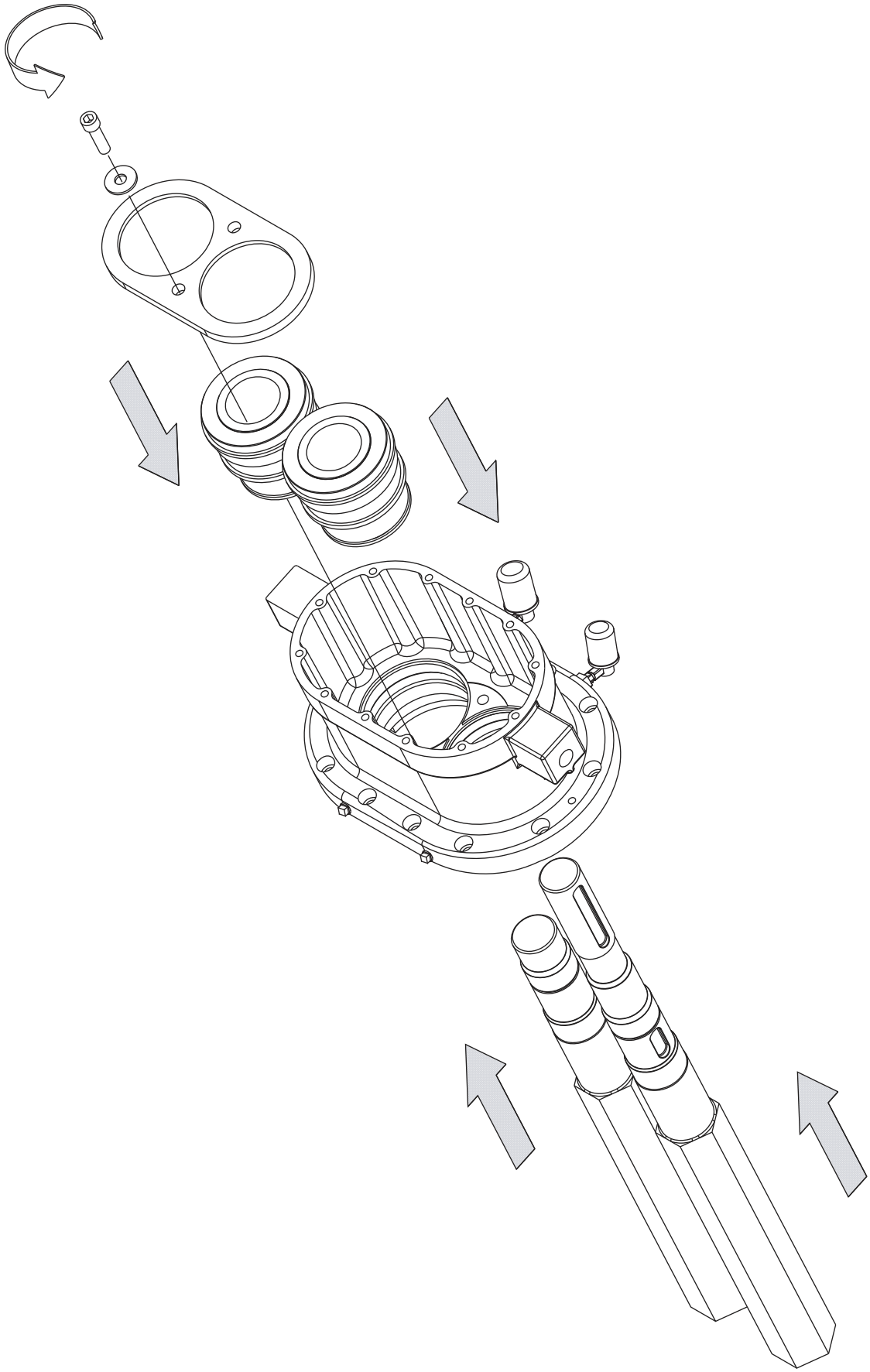

CT201

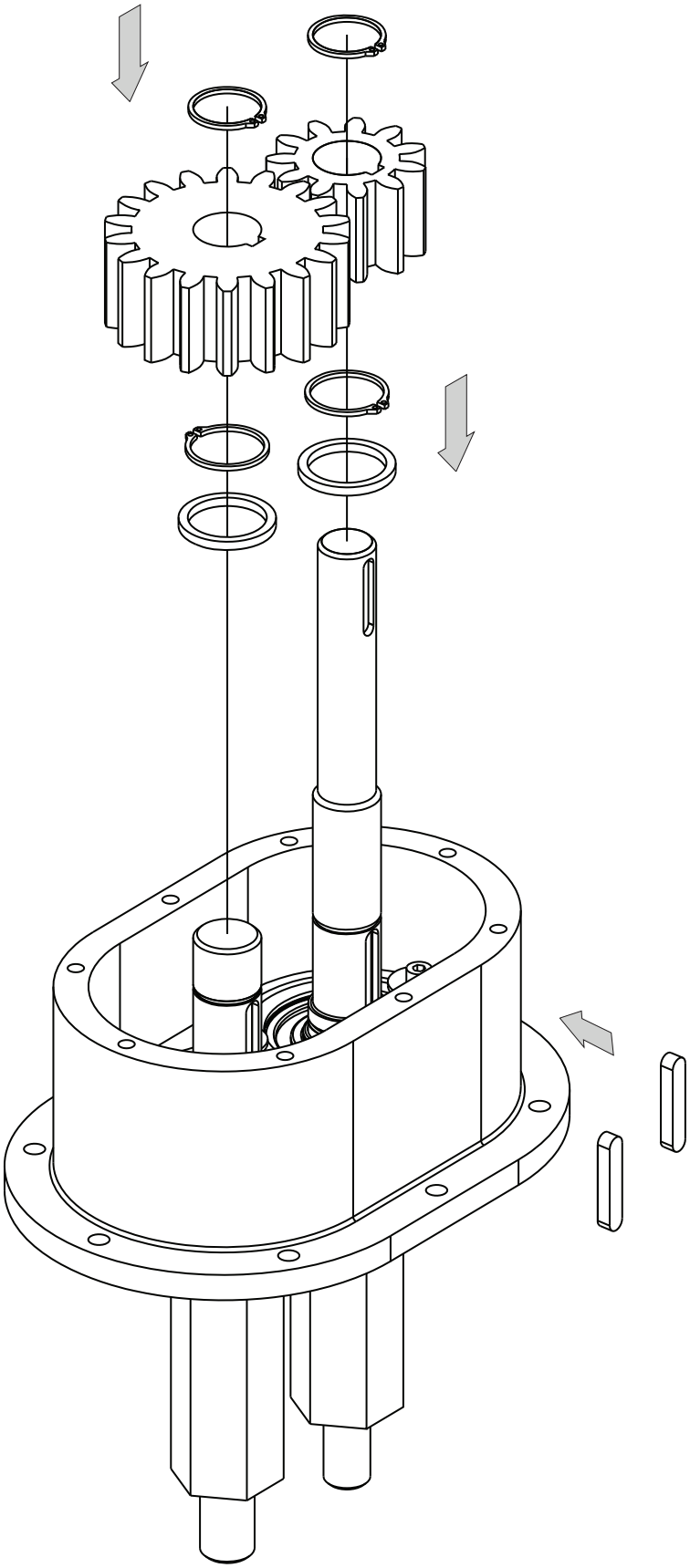

CT203 & CT205

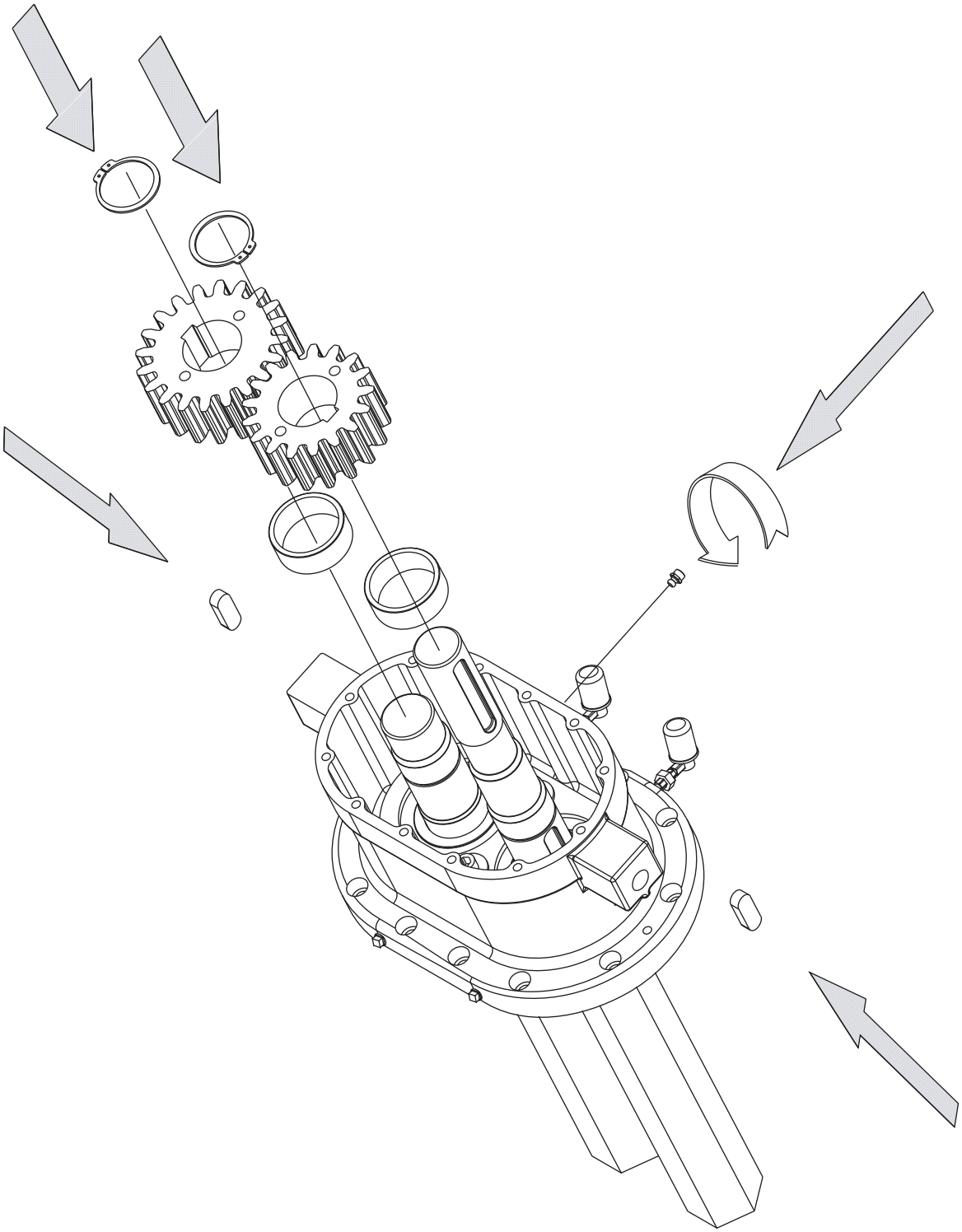

CT201

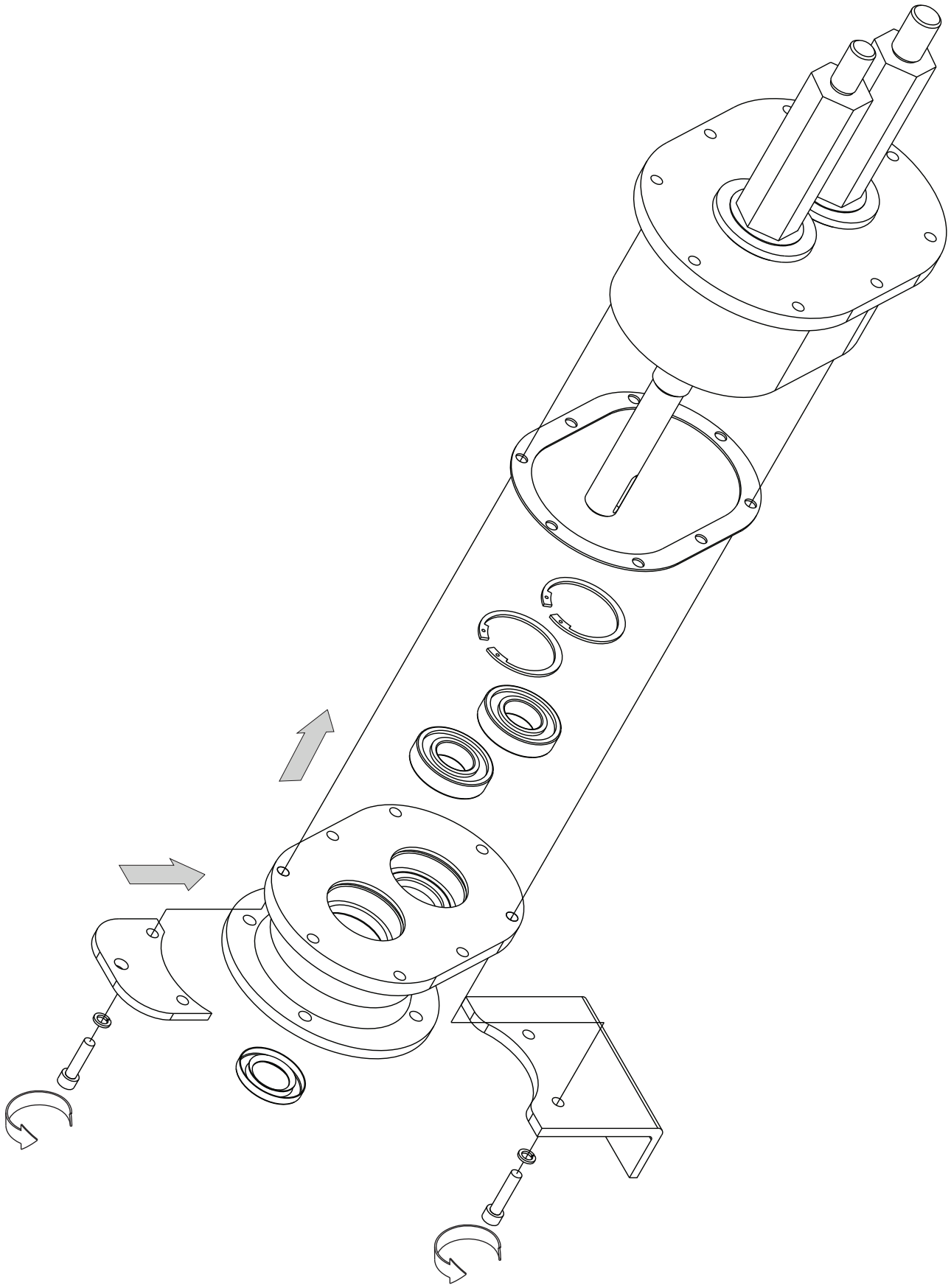

CT203 & CT205

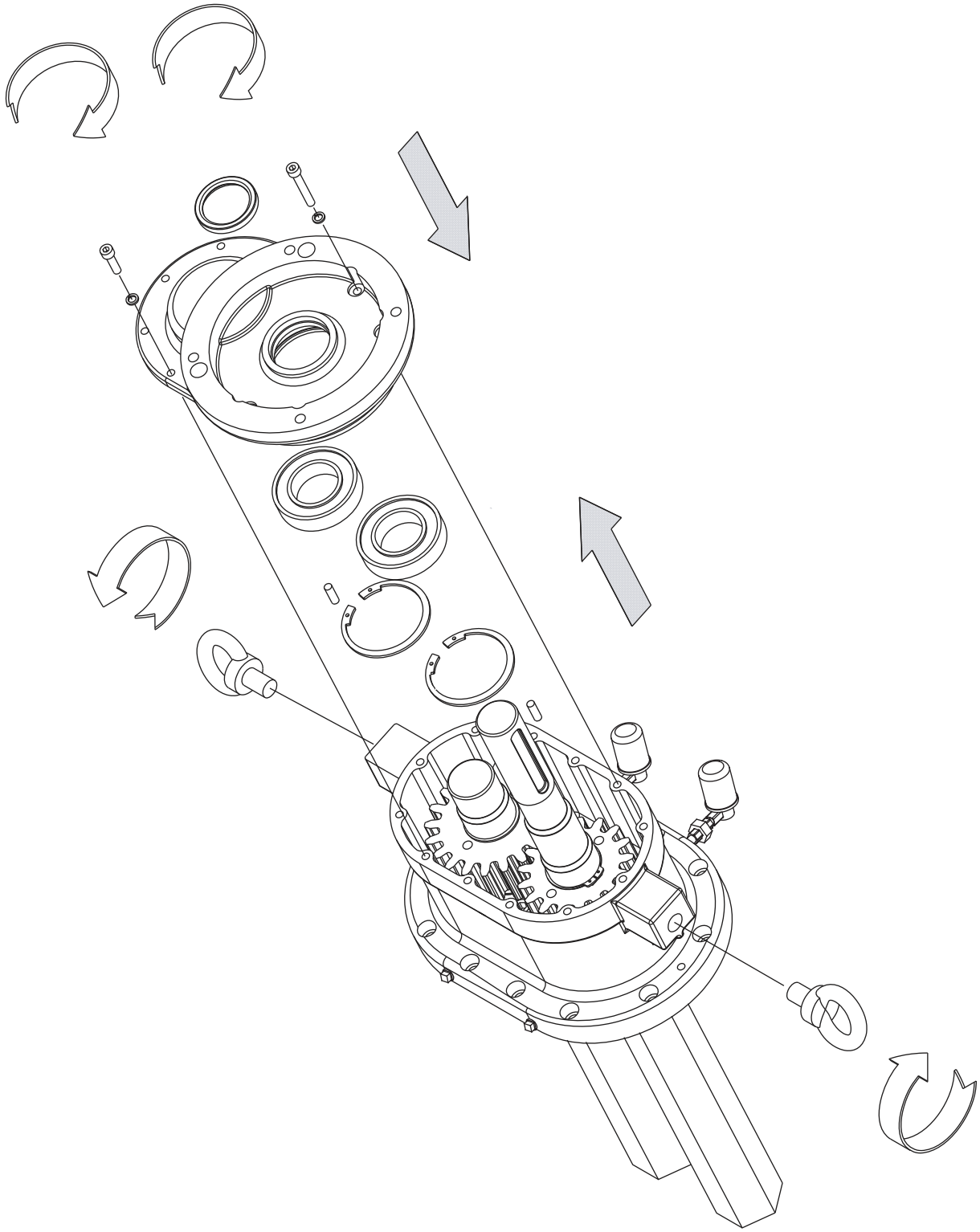

CT201

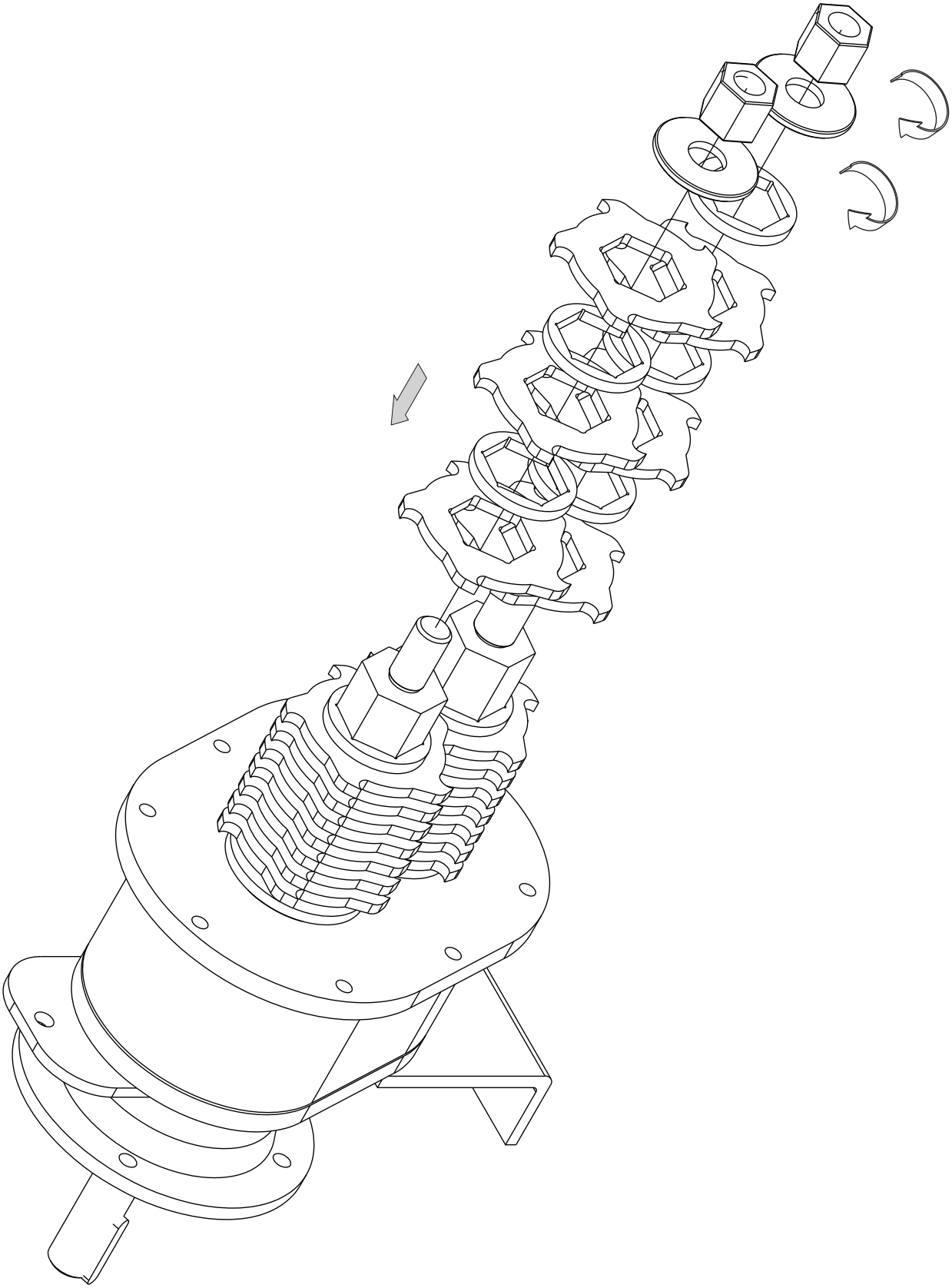

CT203 & CT205

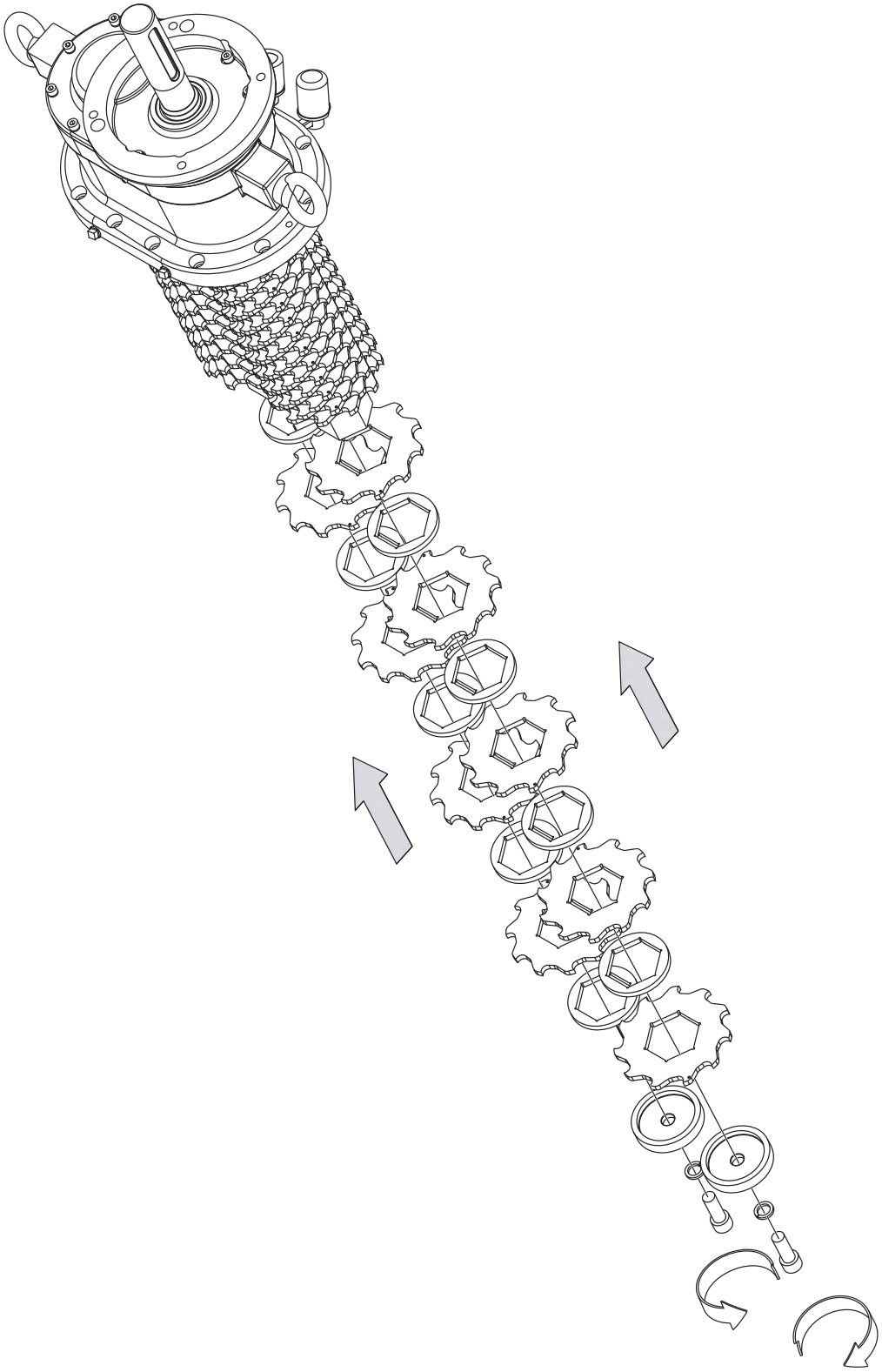

CT201

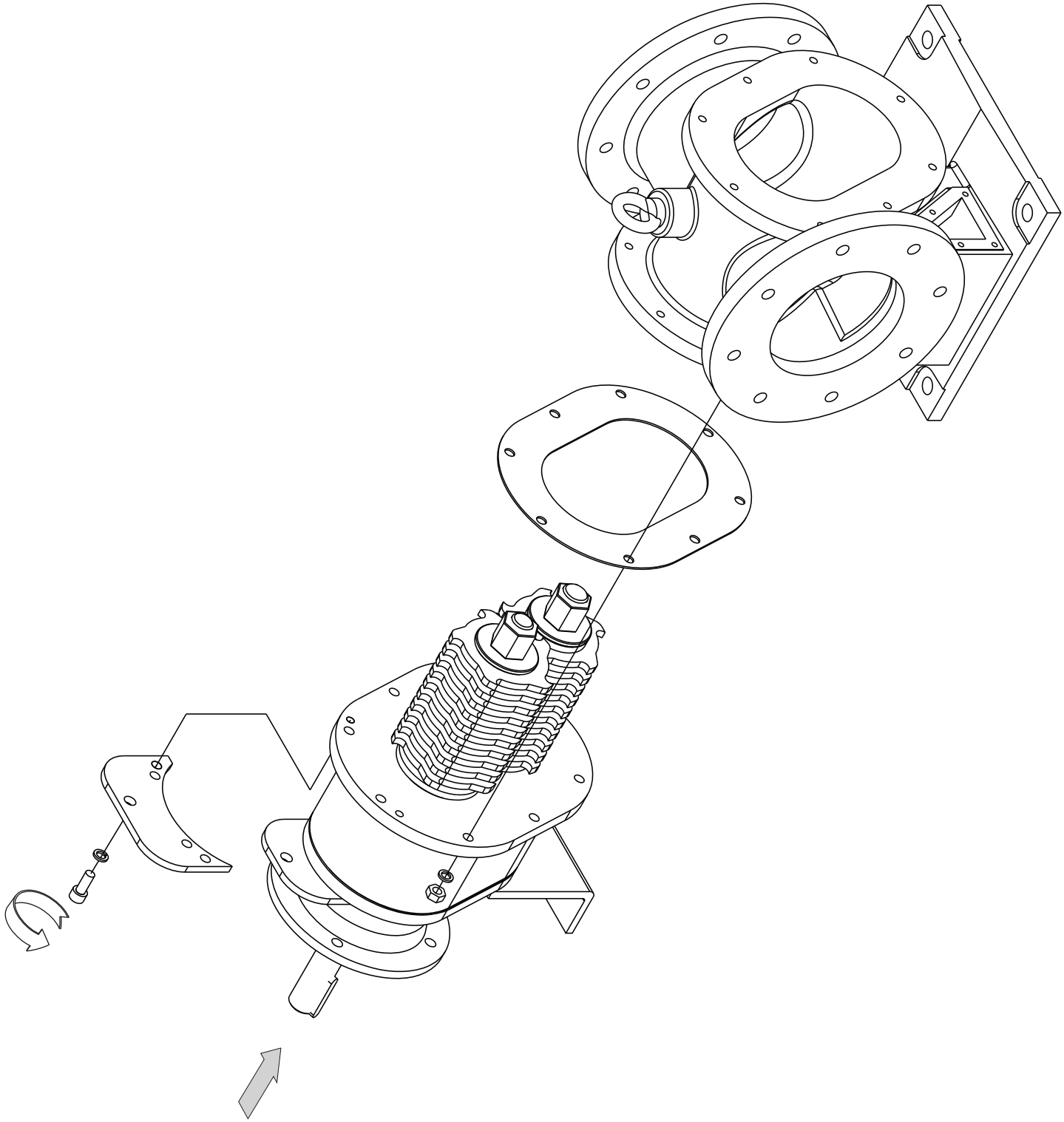

CT203 & CT205

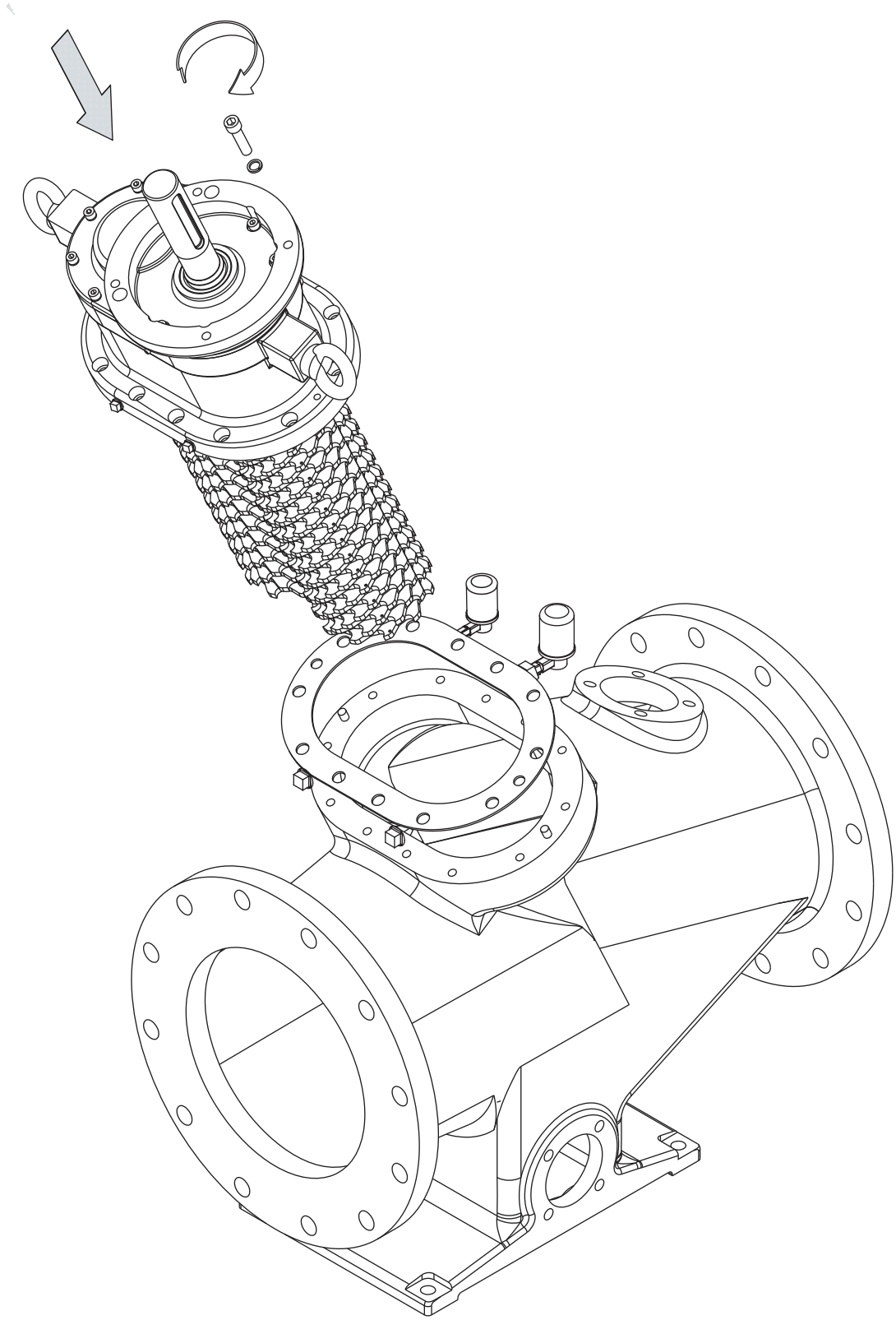

CT201

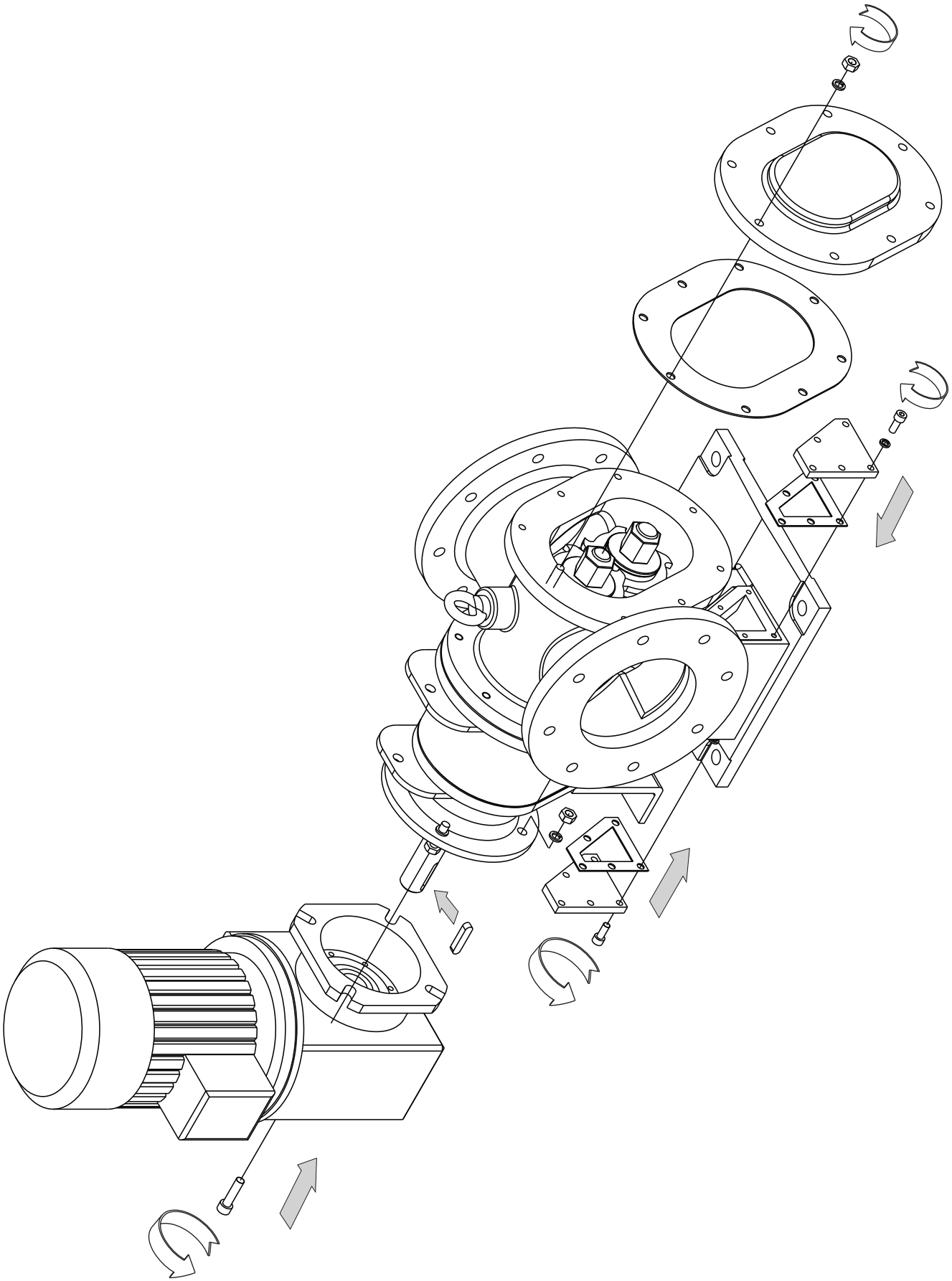

Part Number Reference - CT201

CT201				
DRG. REF.	DESCRIPTION		DRG. REF.	DESCRIPTION
0100	Gear Housing		P101	Soc cap screw
0300	Main Body		P102	Soc set screw
0600	Nameplate		P103	Spring washer
1100	Bearing Housing		P105	Soc cap screw
2010	Insp cover gasket		P106	Soc cap screw
2016	Gasket		P107	Spring washer
2017	Gasket		P108	Circlip int
2500	Cutter		P109	Circlip ext
3200	Drive shaft		P110	Lipseal
3250	Driven shaft		P111	Key
3500	Spacer		P112	Hex head screw
4700	Back up washer		P113	Spring washer
4702	Bearing retaining washer		P114	Bearing
4750	Cutter locking ring		P115	Circlip ext
5900	Inspection Cover		P116	Mech seal
5901	Inspection Cover		P117	Nyloc nut
6200	Support foot		P118	Soc cap screw
7700	Lifting Plate		P119	Spring washer
7701	Lifting Plate		P400	Soc cap screw
7800	Drive gear		P401	Spring washer
7801	Driven gear		P500	Key
			P501	Hex head screw
			P502	Spring washer
			P503	Nut
			P504	Collared eye bolt

Exploded Views - CT201

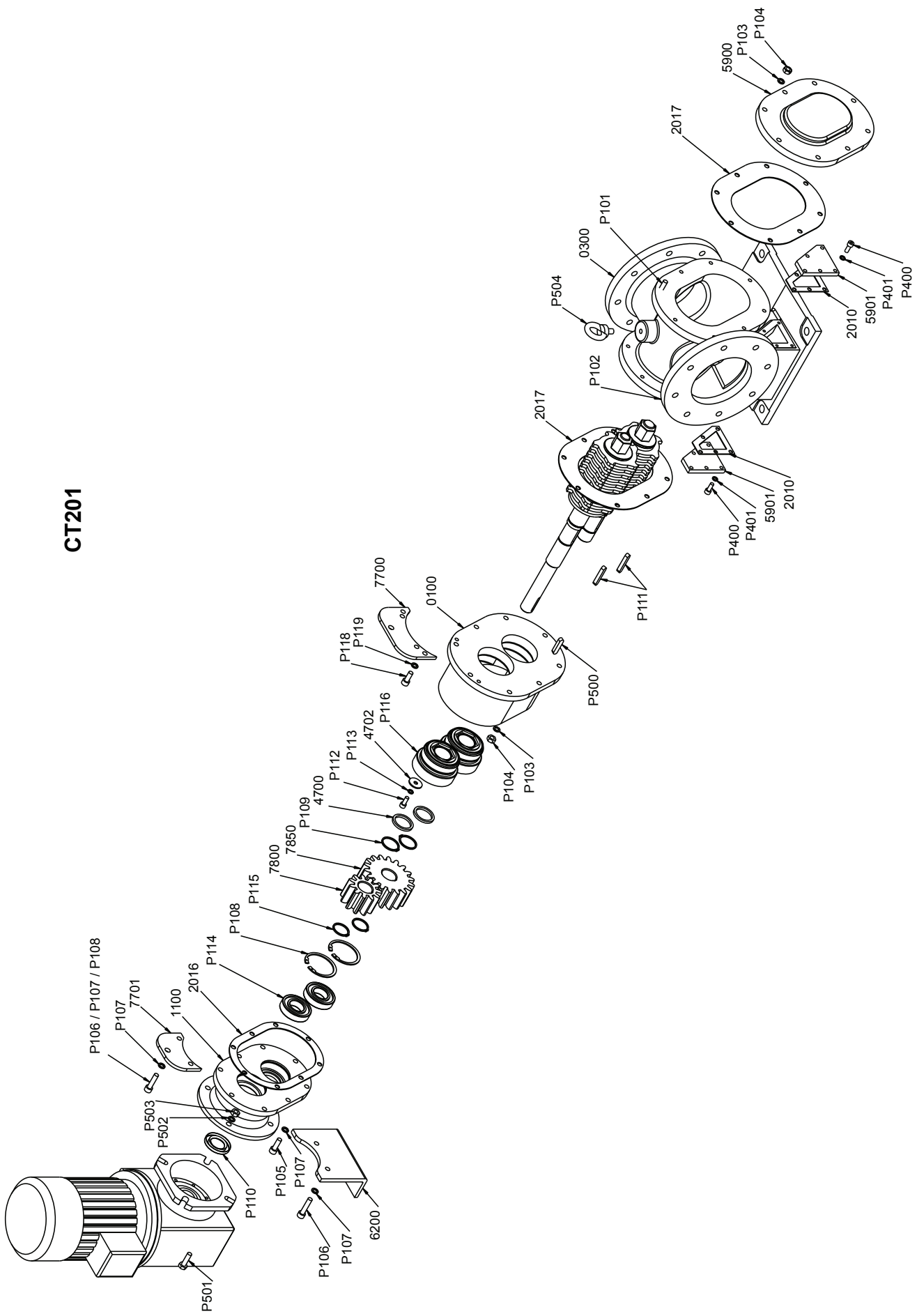

CT201

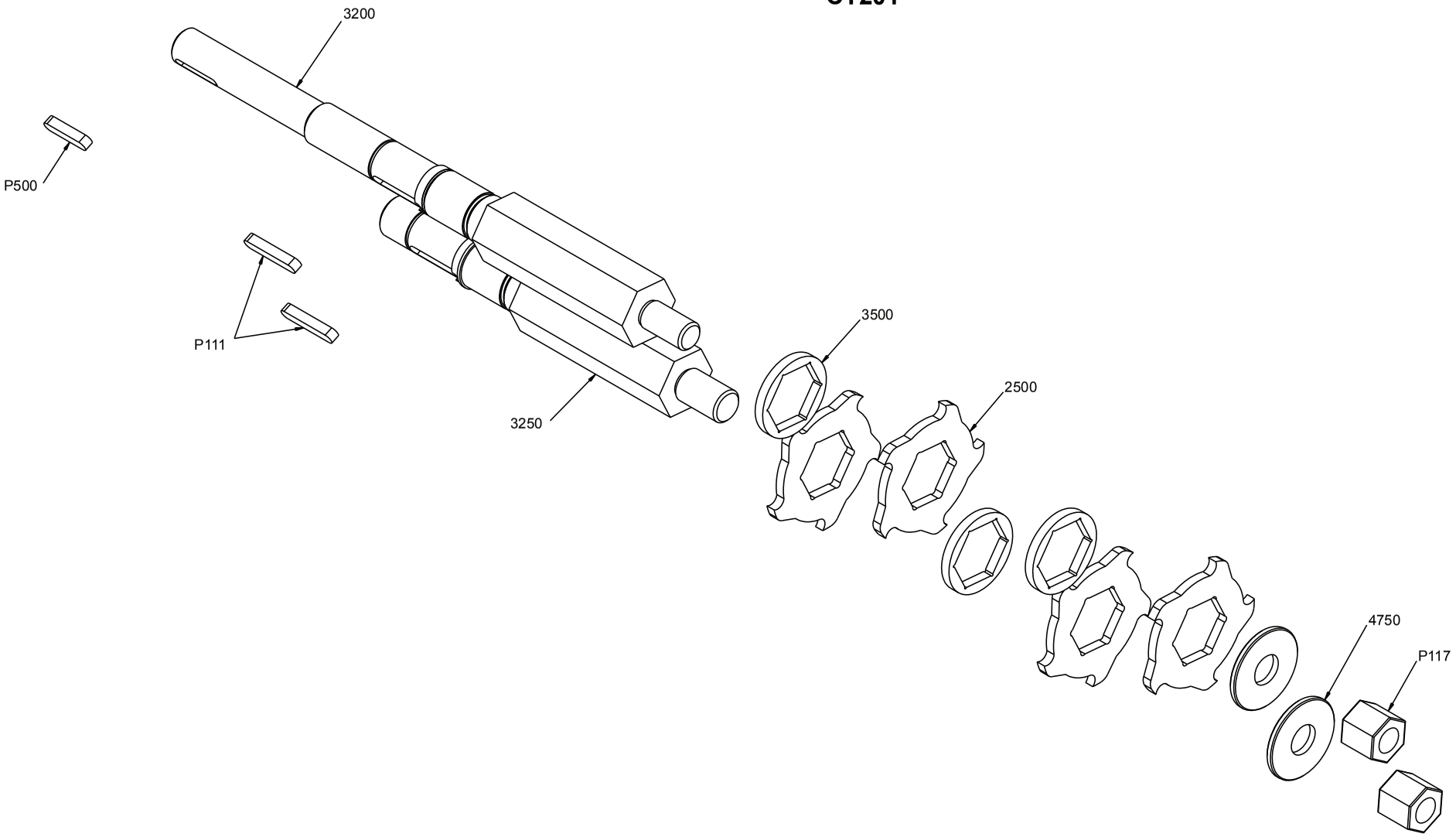

Exploded Views - CT203 & CT205

CT203 & CT205						
DRG. REF.	DESCRIPTION	DRG. REF.	DESCRIPTION	DRG. REF.	DESCRIPTION
0100	Bearing Housing	P101	Soc cap screw	P400	Hex head screw
0200	Datum tube	P102	Spring washer	P401	Plain washer
0300	Main Body	P103	Soc cap screw	P402	Spring washer
0600	Nameplate	P104	Spring washer	P403	Hex head screw
1100	Cover Plate	P105	Soc cap screw	P404	Plain washer
1160	Seal retaining plate	P106	Spring washer	P405	Spring washer
2000	Main Body Gasket	P107	Circlip int	P500	Key
2010	Insp cover gasket	P108	Circlip ext	P501	Hex head screw
2500	Cutter	P109	Key	P502	Spring washer
3200	Drive shaft	P110	Lipseal	P503	Collared eye bolt
3250	Driven shaft	P111	Dowel Pin	P701	Constant level oiler
3500	Spacer	P112	Dowel Pin	P702	Hex Nipple
3650	Shaft end cap	P113	Bearing	P703	F/F Union
5900	Inspection cover	P114	Special cart seal	P704	M/F Union
7800	Drive gear	P115	Soc cap screw	P705	90 ° Elbow
7801	Driven gear	P116	Spring washer		
9950	Lifting frame	P117	SS LH screw		
		P118	Spring washer		
		P119	Hex head screw		
		P120	Spring washer		
		P121	Washer - Seal retainer		
		P124	Nipple 1/4 BSP		
		P125	Tapered Plug		

Exploded Views - CT203 & CT205

CT203 & CT205

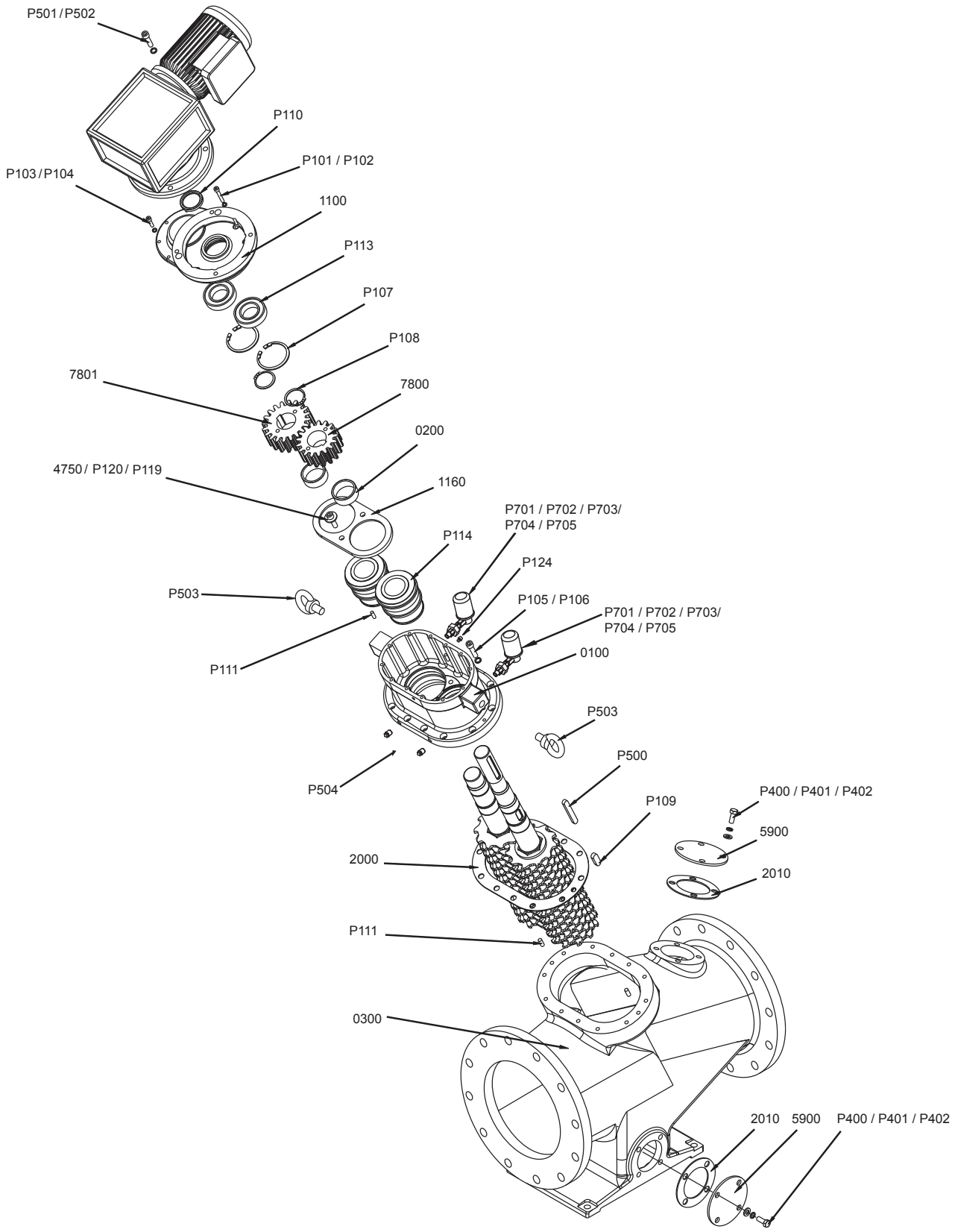

CT203 & CT205

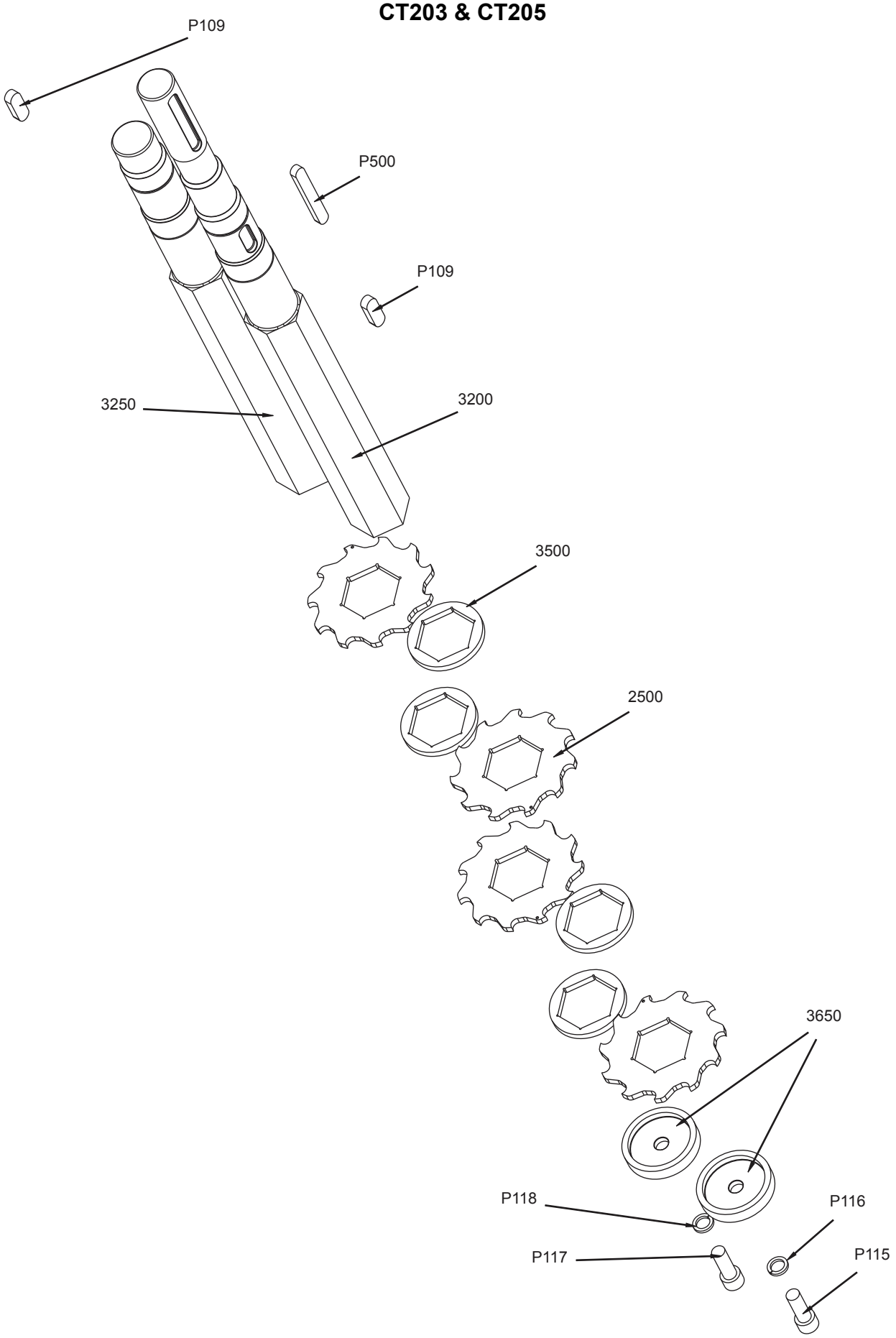

Sectional Arrangement - CT201

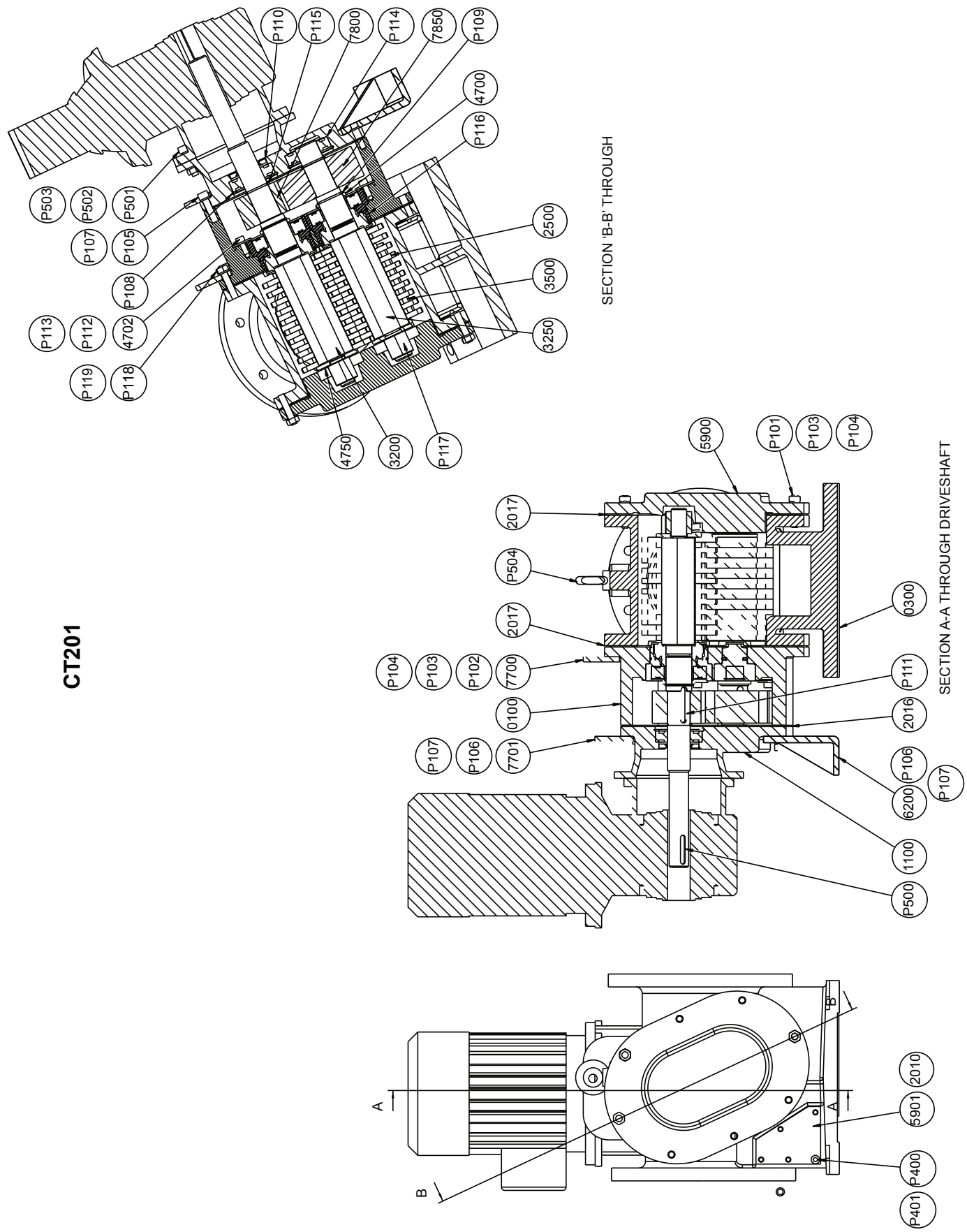

Sectional Arrangement - CT203 & CT205

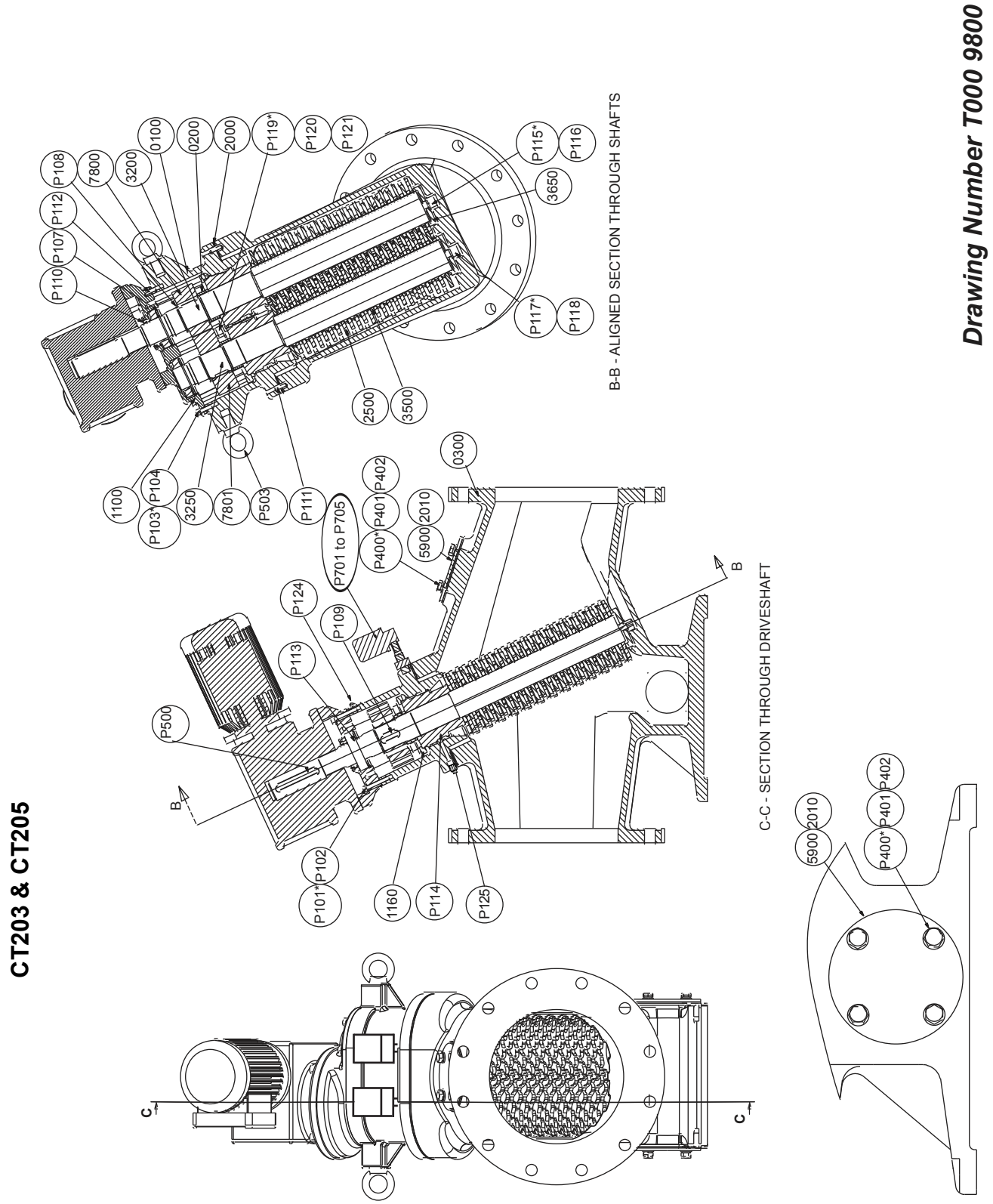

CT203 & CT205

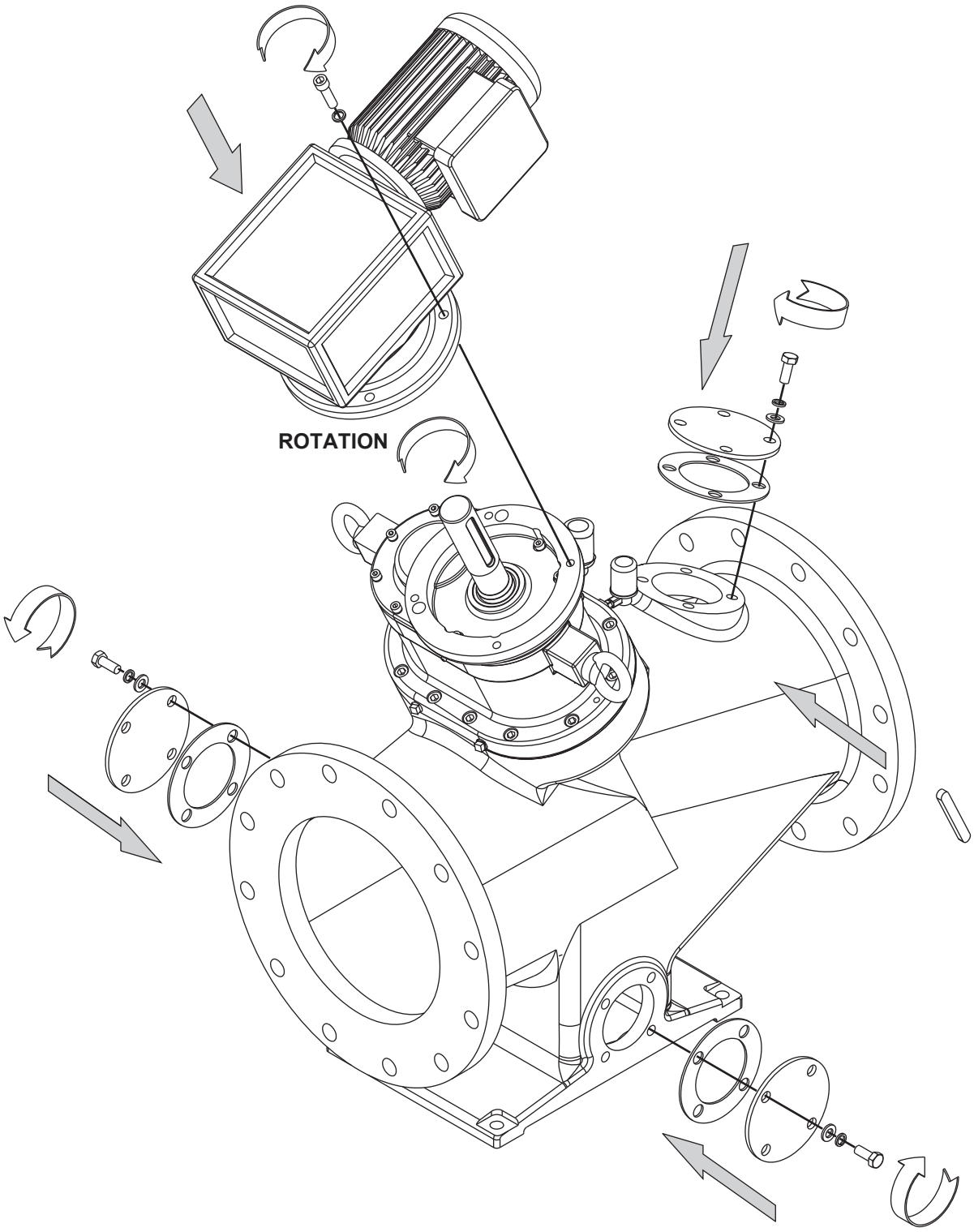

General Arrangement - CT201

CT201

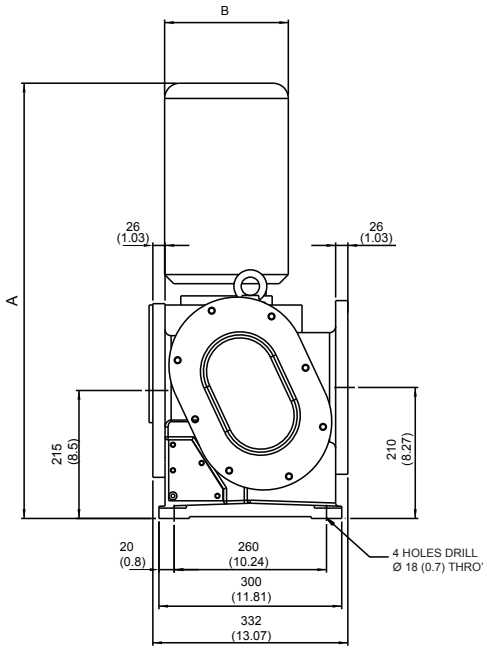

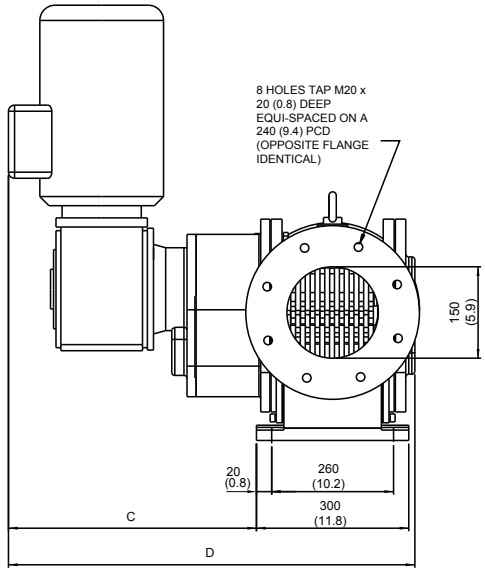

Model No	kW	HP	A (mm)	A (inch)	B (mm)	B (inch)	C (mm)	C (inch)	D (mm)	D (inch)	Wt Kg (lb) (Approx)
CT201D	1.5	2.0	700	27.6	186	7.3	400	15.7	700	27.6	140 (308.6)
CT201D	2.2	3.0	715	28.1	203	8.0	430	16.9	730	28.7	175 (385.7)

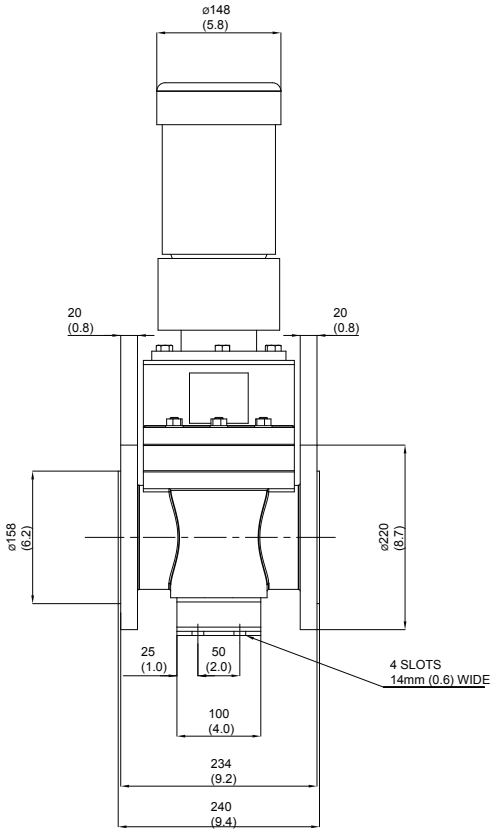

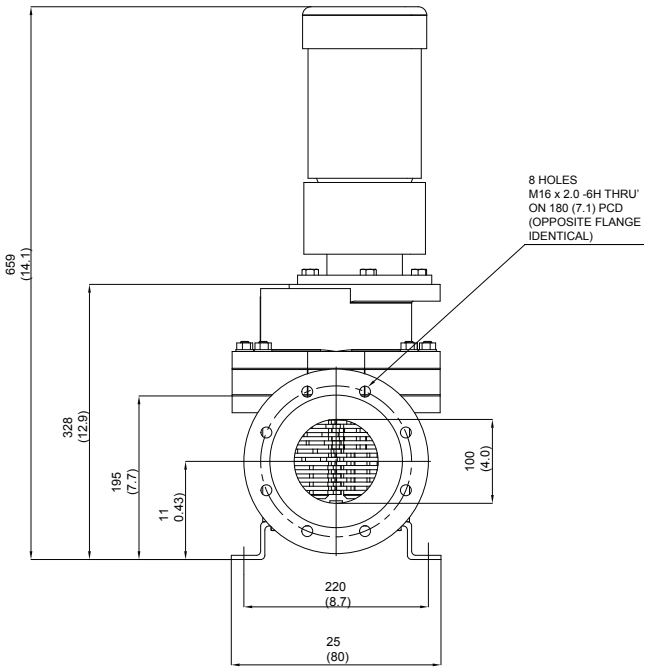

General Arrangement - CT203 & CT205

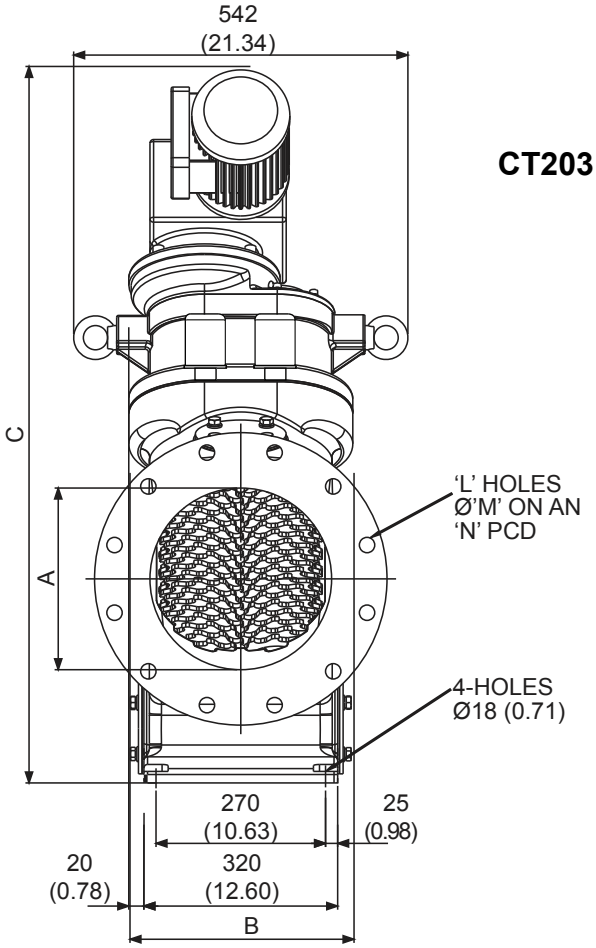

CT203 & CT205

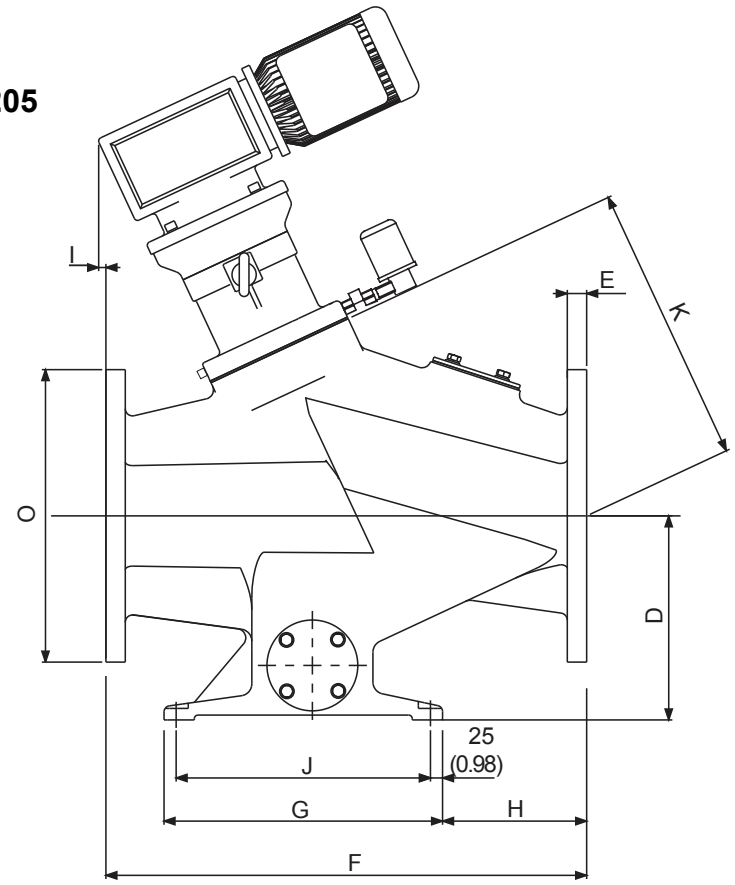

MODEL No.	kW	A	B	C	D	E	F	G	H	I	J	K	L	M	N	O	Wt. lb
CT203C	1.5	100	370	1020	205	24	489	410	124	140	360	363	8	18	180	220	290
CT203D		150	370	1050	230	25	540	410	155	40	360	354	8	22	240	285	290
CT203E		200	370	1050	256	29	591	410	205	16	360	341	12	22	295	343	290
CT205F		250	370	1190	281	32	692	460	205	30	410	494	12	26	355	406	345
CT205G		300	370	1190	332	32	794	460	263	-17	410	472	12	26	410	488	345
CT203C	2.2 - 4.0	100	395	1130	205	24	489	410	124	169	360	363	8	18	180	220	340
CT203D		150	395	1170	230	25	540	410	155	97	360	354	8	22	240	285	340
CT203E		200	395	1170	256	29	591	410	205	72	360	341	12	22	295	343	340
CT205F		250	395	1310	281	32	692	460	205	87	410	494	12	26	355	406	390
CT205G		300	395	1310	332	32	794	460	263	40	410	472	12	26	410	488	390

MODEL No.	Hp	A	B	C	D	E	F	G	H	I	J	K	L	M	N	O	Wt. lb
CT203P	2.00	3.94	14.57	40.16	8.07	0.94	19.25	16.14	4.88	5.51	14.17	14.29	0.31	0.71	7.09	8.66	639
CT203Q		5.91	14.57	41.34	9.06	0.98	21.26	16.14	6.10	1.57	14.17	13.94	0.31	0.87	9.45	11.22	639
CT203R		7.87	14.57	41.34	10.08	1.14	23.27	16.14	8.07	0.63	14.17	13.43	0.47	0.87	11.61	13.50	639
CT205S		9.84	14.57	46.85	11.06	1.26	27.24	18.11	8.07	1.18	16.14	19.45	0.47	1.02	13.98	15.98	760
CT205T		11.81	14.57	46.85	13.07	1.26	31.26	18.11	10.35	-0.67	16.14	18.58	0.47	1.02	16.14	19.20	760
CT203P	2.9 - 5.3	3.94	15.55	44.49	8.07	0.94	19.25	16.14	4.88	6.65	14.17	14.29	0.31	0.71	7.09	8.66	749
CT203Q		5.91	15.55	46.06	9.06	0.98	21.26	16.14	6.10	3.82	14.17	13.94	0.31	0.87	9.45	11.22	749
CT203R		7.87	15.55	46.06	10.08	1.14	23.27	16.14	8.07	2.83	14.17	13.43	0.47	0.87	11.61	13.50	749
CT205S		9.84	15.55	51.57	11.06	1.26	27.24	18.11	8.07	3.43	16.14	19.45	0.47	1.02	13.98	15.98	860
CT205T		11.81	15.55	51.57	13.07	1.26	31.26	18.11	10.35	1.57	16.14	18.58	0.47	1.02	16.14	19.20	860

FLANGES DRILLED TO BS4504 (ANSI B16.5)

Drawing Number T000 9900

Lifting Diagrams

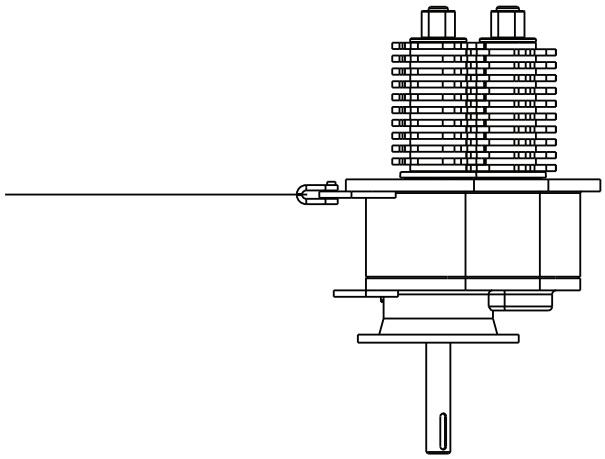

Cartridge Without Drive

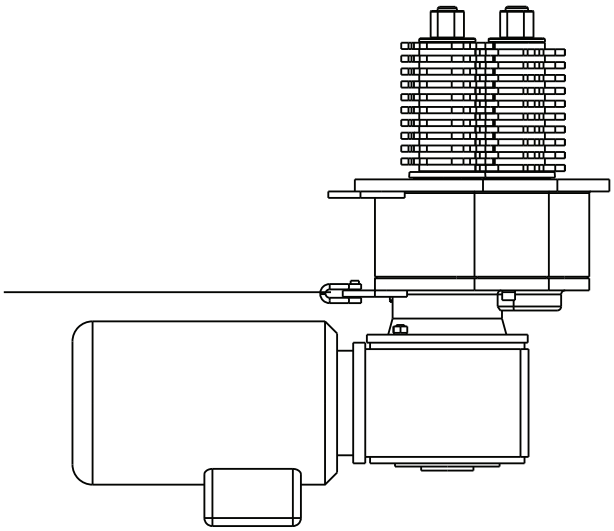

Cartridge With Drive

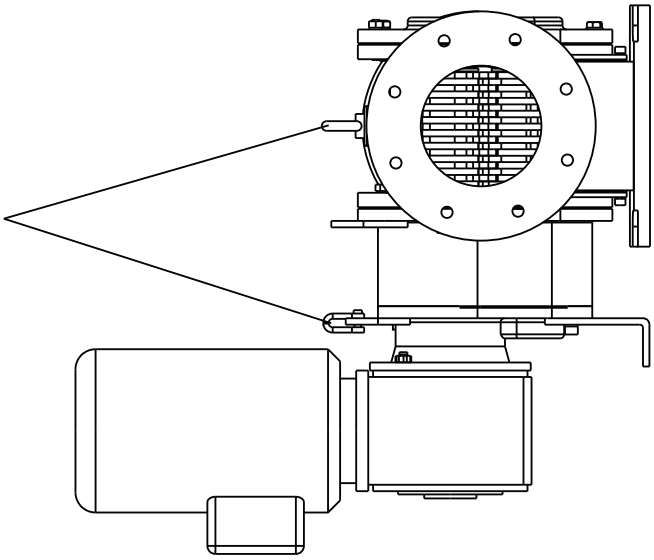

Full Muncher Assembly

CT201

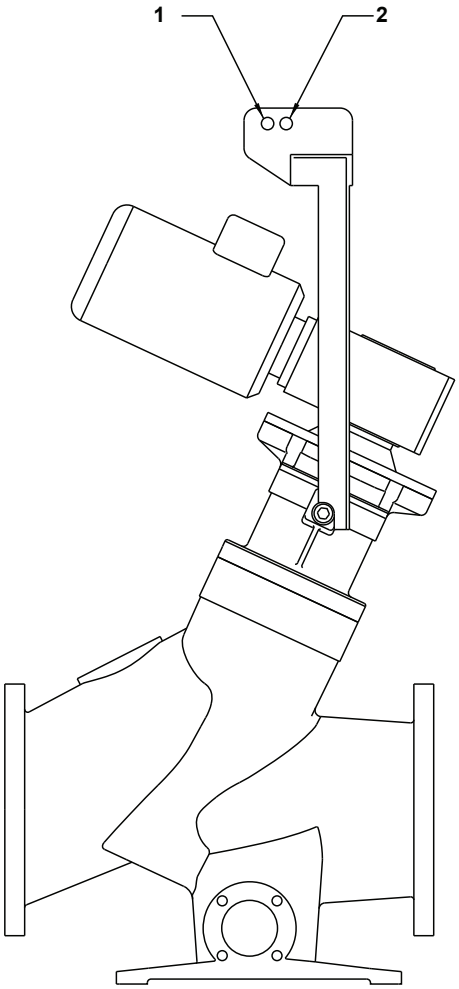

	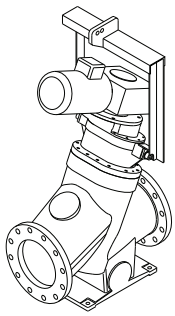	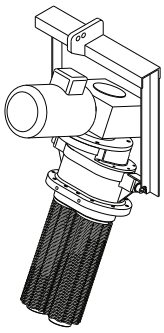	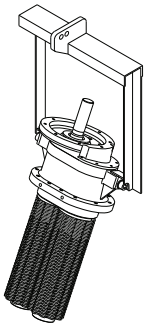
CT203	290-340	140-190	90-140
CT205	345-390	195-240	145-190